Subject: Multidisciplinary

Language: Multiple Languages

ESTD. 2025
Vol. 1, No. 2 (January - June, 2025)

ISSN: 3049-1789

IJARSAI

INTERNATIONAL JOURNAL OF ADVANCED RESEARCH SCIENTIFIC ANALYSIS & INFERENCES

International Multidisciplinary Biannual Double-Blind
Peer-Reviewed & Refereed Print Research Journal

EDITORIAL BOARD

IJARSAI

INTERNATIONAL JOURNAL OF ADVANCED RESEARCH SCIENTIFIC ANALYSIS & INFERENCES

1. **Editor-in-Chief: Dr. Sreedhar P. Nair**, Head of the Research Department of Commerce, St. Michael's College, Mayithara P.O., Cherthala, Alappuzha District, Kerala, - 688 539, Affiliated to the University of Kerala, Thiruvananthapuram, Kerala, India, Email: editor@ijarsai.org, editor.ijarsai@gmail.com
2. **Eva P. Lekareva**, Faculty of Asian and African Studies, Saint Petersburg State University, Saint Petersburg, Russia, Email: eva.lekareva@spbu.ru
3. **Prof. Dr. Bhagat Suberi**, Head of the Department of Forestry, College of Natural Resources, Lobesa, Punakha, Royal University of Bhutan, PO Box 11001, Lower Motithang, Thimphu, Bhutan. Email: bsuberi.cnr@rub.edu.bt
4. **Prof. Dr. Bharat Ram Dhungana**, Professor, School of Business, Pokhara University, Pokhara Metropolitan City-30, Lekhnath, Kaski, Nepal, Post Box: 427 Email: bharatram@pusob.edu.np
5. **Dr. Anju Kalluvelil Janardhanan**, Professor of Finance & Deputy Dean, Southern Cross Institute, Level 2, 1-3, Fitzwilliam Street Parramatta 2150, New South Wales, Australia, Email: anju.kj@sci.edu.au
6. **Prof. Tomy Thomas**, Faculty of Commerce, Rajagiri College of Social Sciences (Autonomous), Rajagiri P.O, Kalamassery, Cochin - 683 104, Kerala, India. Email: tomythomas@rajagiri.edu
7. **Dr. Sreeja Radhakrishnan**, Faculty of Commerce, Rajagiri College of Social Sciences (Autonomous), Rajagiri P.O, Kalamassery, Cochin - 683 104, Kerala, India. Email: sreeja@rajagiri.edu
8. **Dr. Bidisha Sarkar Datta**, Faculty of Management, No.92, Shyamaprasad Mukherjee Road. Kolkata. West Bengal. India. PIN - 700 026, Email: bidisha.datta@asutoshcollege.in
9. **Dr. Shilpa Nandy**, Associate Professor & Head of the Department of Political Science, Khudiram Bose Central College, Kolkata, Affiliated to the University of Calcutta, India. Email: shilpanandy@yahoo.co.in
10. **Dr. Deepa Mathew**, Faculty of Commerce, T.M.Jacob Memorial Government College, Manimalakunnu, Ernakulam District, Kerala, India, Email: drdeepa@ijarsai.org
11. **Dr. Jagdish Dipabhai Dhoriya**, Faculty of Commerce, Sardar Vallabhai Commerce College Near LIC Building, Relief Rd, Ahmedabad, Gujarat 380001, Email: info@svcolleges.org
12. **Dr. Robin Hissang Tadung**, Professor of Political Science and Principal, Government College, Seppa, Wessang, East Kameng District, Arunachal Pradesh, India, Email: info@governmentcollegeseppa.org
13. **Adv. Pradeepkumar John**, Abad Bluechip, 3B Tower 1, Kusumagiri P.O , Near Info Park, Kakkanad, Eranakulam, Kochi, Kerala, India, PIN-682030, Email: info@pjohnadvocates.com
14. **Prof. Dr. Priyesh C.A.**, Professor of Economics, Government College, Attingal, Thiruvananthapuram-695101, Kerala, India, https://gcatl.ac.in/, Email: drpriyesh@ijarsai.org
15. **Dr. Mathew V.**, Professor of English & Former Principal, St.Michael's College, Cherthala, Alappuzha District, Kerala, India., Email: drmathew@ijarsai.org

Subject: Multidisciplinary *ESTD. 2025* Language: Multiple Languages

Vol. 1 No. 2 (January - June 2025) ISSN: 3049-1789

IJARSAI

INTERNATIONAL JOURNAL OF ADVANCED RESEARCH SCIENTIFIC ANALYSIS & INFERENCES

International Multidisciplinary Biannual Double-Blind Peer-Reviewed & Refereed Print Research Journal

CONTENTS

Best Accounting Practices in Public Sector Transport
Beegum Naziya K. & Dr. Sreeja Devi V.M. *03*

Harmony in Banking: Kerala Bank's Sustainable Development Journey
Bismi A. *12*

A Study on Investor's Attitude Toward Post Office Saving Schemes with Special Reference to Thrissur District
Amritha Thomas & Jitha Thomas *18*

Is Cognitive dissonance a stumbling block in workplace? –An Evaluation of the IT sector
Dr. Susan Chirayath *24*

Enhancing Patient Outcomes And Operational Efficiency In Healthcare Through Lean Six Sigma:A Comprehensive Review And Future Directions
Arya A.T. & Dr. Lissy Bennet *46*

The Institution Factor: Exploring Its Moderating Effect On Entrepreneurial Competence And Social Innovation Among Engineering Students
Badusha Muhammed *60*

An Examination of Discrimination Faced by Immigrant Indian International Students in Canada
Linimol R.J. & Dr. Carvalho Faustina Cicila *73*

Job Satisfaction and Employees Engagement-A Study amongEmployees inIndianRailways with SpecialReferenceto Thiruvananthapuram Station
Shamna H. *82*

Awarenesson Cyber Crimesamong College Students with Special Reference to Arts & Science Colleges in Alappuzha District of Kerala, India
Promod Gopal & Neeraj S. *92*

An Empirical Study on Exploring Motivational Factors Behind Organic Cosmetic and Personal Care Product Consumerism in India
Mrs. Tracy George Bertle & Dr. Ansi Rahila *99*

Behind the Screens: The Business of Financial Influencers
***Kiran Toms* & CMA (Dr.) T. Rajesh** *111*

Unveiling the Complex Web of Expropriation: A Comprehensive Review
Aleena Maria Zacharia, Krishna Babu & Dr. Biju S.K. *118*

Employee Retention Prediction Using Machine Learning
Arya Soman, Rasheeda R.V., Rohit Krishnan M. & Dr. Rejani R. Nair *137*

Impactof Digital Marketingon Consumer Preferencesfor Branded Textile Productsin Kerala
Rakhi R. & Dr. Lissy Bennet *156*

Best Accounting Practices in Public Sector Transport

Discipline: Commerce

Beegum Naziya K.
Research Scholar, Kerala University, Email: beegum1991@gmail.com

Dr. Sreeja Devi V.M.
Assistant Professor, MSM College, Kayamkulam, Alappuzha, Email: sreejadevi@msmcollege.in

Received: 08 Sep. 2024 | Revised Submission: 03 Dec. 2024 | Accepted: 20 Dec. 2024 | Available Online: 10 Mar. 2025

Abstract - The transportation business is crucial in connecting people, commodities and services across regions, and it is a driving force behind economic activity and globalization. This industry includes various types of transportation, each providing a distinct purpose. The Kerala State Road Transport Corporation (KSRTC) is a major player in India's transportation business. KSRTC is a state-owned public transportation business in Kerala. This study identifies the best accounting methods in transportation business, with a particular emphasis on the example of the Kerala State Road Transport Corporation. Timely and accurate financial reporting is critical for determining the economic health of transportation companies. By adopting efficient cost management, technology-driven solutions, companies can chart a course toward financial excellence, bolstering their competitive edge and long-term success in the ever-evolving world of transportation. The future benefits of implementing sound accounting practices in KSRTC extend beyond financial management to encompass strategic decision-making, transparency, sustainability, and operational efficiency. By adhering to these practices, KSRTC can position itself for long-term success and contribute to the transportation needs of the people of Kerala.

Keywords: Accounting practices, financial excellence, Transportation industry

Introduction

Transportation is an integral part of modern society, enabling the movement of people and goods. The transportation industry encompasses a wide array of modes and services, contributing to economic development and global connectivity. The Kerala State Road Transport Corporation (KSRTC) is a prominent entity with the border transportation industry in India. KSRTC operates as the state-owned public transport corporation in Kerala, a state in southern India. Accounting practices in the transportation industry are vital for managing finance, complying with regulations, and optimising operational efficiency. These practices help transportation companies to track revenue and expenses accurately, make informed decisions, and maintain transparency with stakeholders. Timely and accurate financial reporting is crucial for assessing the financial health of transportation companies. By adopting efficient cost management, comprehensive budgeting, transparent financial reporting, stringent compliance measures,

and technology-driven solutions, these companies can chart a course toward financial excellence, bolstering their competitive edge and long-term success in the ever-evolving world of transportation. By adhering to these practices, KSRTC can position itself for long-term success and contribute to the transportation needs of the people of Kerala.

Reviewof Literature

- **Dr. E. Vanajakshi ,Dr.Pralhad.P.Rathod (2021)** ,conducted a Performance evaluation of KSRTC with a focus on the Tumkur Division. The study aimed to enhance public transport services by highlighting the need for employees to adapt to the evolving environment. Key recommendations include adopting new technologies, developing relevant skills, implementing modern performance measures, fostering professionalism and encouraging innovation in business practices. The study also emphasized the importance of flexible working hours, variable compensation, customer centric approaches and delivering quality service to improve organizational performance and efficiency.
- **Leejiya Jose (2019)** conducted a study on Performance evaluation of Kerala State Road Transport Corporation using Data Envelopment Analysis (DEA) to measure the technical and scale efficiency of KSRTC depots. The findings revealed that Trivandrum city and Trivandrum Central depots consistently operated efficiently, achieving average efficiency score of 1. In contrast, Ernakulam depot was identified the most inefficient with an average efficiency score of 0.741
- **Dr. InduVijayan (2018)**conducted a comparative study on the pricing policy of KSRTC between Kerala and Karnataka. The study highlighted that Kerala follows a fare revision through PISCO with government approval while Karnataka has a dedicated fare revision committee that operates independently. The Managing director of Karnataka RTC recommended an automatic fare revision system to prevent losses. The research also revealed that only Karnataka, Bangalore and Maharashtra RTCs are profitable, while other RTC's are faced with significant challenges. In Kerala irregular fare, hikes have driven short distance passengers to personal vehicles and long-distance passengers to trains, weakening KSRTC's market position.
- **Vini M.S., Sree Krishnan. P (2017)** conducted a study titled "An evaluation on the performance of Kerala State Road Transport Corporation – a case study". The researchers analyzed KSRTCs financial performance from 2012 to 2016 using variables such as scheduled operated, number of buses, average daily collection, earnings per kilometer and earnings per bus. The study found that KSRTCs performance show a declining trend due to rising operational cost.

- **Dr. K. Saravana (2016)**conducted a study on the satisfaction levels of KSRTC Passengers and identified several factors affecting passenger satisfaction including bus fare, timeliness, travel comfort, concessional rate, employee behavior and additional service during festivals. The study highlighted the need for improvements in rural services and services outside Kerala while noting that employee behaviortoward passenger was generally favorable. The researcher suggested innovative solutions to enhance customer satisfaction such as wifi , bus tracking system, online reservations and improved bus maintenance services.

Statementof the Problem

Accounting practices are crucial for the transport industry to maintain financial control, make informed decisions, and ensure compliance with regulations. It provides a foundation for efficient financial management, cost control and overall business success in the highly competitive transport sector. Accounting practices are integral to the Kerala Road Transport Corporation's efficient operation, financial management and compliance with regulatory requirements. They provide foundation for making informed decisions, controlling costs, optimizing revenue, and ensuring the responsible and accountable use of resources, which is especially important for a government entity like KSRTC.This study is concentrated to the best accounting practices in transportation industry with specific focus on Kerala State Road Transport Corporation.

Need and Significance of the Study

Best accounting practices ensure transparency and accountability in financial reporting. This is essential for government-run organisation like KSRTC, as it deals with public funds and has responsibility to provide reliable financial information. Through the related literature there was no study related to the accounting practices followed by KSRTC. Therefore, this study Best Accounting Practices in Public Sector Transportis Considered Significant.

Objective of the Study

1. To assess the accounting practices followed by Kerala State Road Transport Corporation.

Methodology

The research study utilizes both primary data and secondary data. Primary data was collected through a structured interview schedule with the administrative officer and General Manager. Secondary data was collected from the official website of Kerala State Road Transport Corporation, articles and KSRTC's account manuals.

Discussion

Background of Accounting Practices

Accounting Practice involves recording the daily financial activities of a business. It is necessary to prepare a company's annual financial statements as required by law. Companies can use different accounting methods but must follow certain standards. The Financial Accounting Standard Board (FASB)provides a set of standardized principles and procedures called Generally Accepted Accounting Principles (GAAP). Public companies in the United States must follow GAAP when preparing financial statements. The two most common accounting methods used by companies are cash accounting and accrual accounting.

Accounting Principles

Accounting Principles are the rules and concept that guide accounting activities. The Financial Accounting Standard Board creates a standardized set of principles, standards and procedures called GAAP. Public companies in the United States must follow GAAP when preparing financial statements. GAAP include official rules set by policy making bodies and widely accepted methods for recording and reporting accounting information. The goal of GAAP is to improve the clarity, consistency and comparability of financial information.

Importance of Accounting methods

- Financial management: Accounting assists transportation businesses in understanding their financial position, tracking income and expenses, and managing cash flow. This is especially significant in an industry where companies frequently deal with large amounts of invoices, accounts receivable, and freight bills.
- Efficient operations: Using best accounting practices, such as current accounting software and integrated systems can assist streamline processes and decrease manual interventions, resulting in higher efficiency and lower costs.
- Informed decision-making: Accurate and current financial records allow transportation companies to make evidence-based, timely financial choices such as financial forecasting, budgeting, and profitability analysis. This is critical in an industry where unpredictable expenses like shipping costs and oil prices can have a big influence on profitability.
- Regulation compliance: The transportation business is subject to a variety of standards and laws that necessitate proper financial management and reporting. Adherence to these standards is critical for transportation firms' long-term success and competitiveness.

- Knowledge and assistance: As transportation companies expand, maintaining proper accounting records can become too complex and time-consuming to handle internally. Accounting specialists can be hired, or accounting services can be outsourced to provide the essential skills and support for duties such as preparing financial statements, performing audits, and maintaining compliance with industry rules.
- Transportation firms may efficiently manage their finances, make informed decisions, and maintain a competitive edge in an ever-changing sector by implementing and adhering to basic accounting procedures.

Accounting issues that transportation companies face.

Transportation companies encounter several accounting issues that are specific to their industry. These difficulties can influence their financial management, operational efficiency, and overall success. Here are some of the most prevalent accounting issues that transportation companies face:

- Managing massive amounts of invoices, accounts receivable, and freight bills
- Cash flow management
- Complicated finance and capital requirements
- Tax and regulatory compliance
- Labor and driver issues
- Financial forecasting and budgeting
- Using the most recent accounting software and connected systems

Best practices for accounting in the transport industry

Accounting methods are critical in the transportation industry for controlling cash flow, liquidity, and financial health. Here are some excellent practices for transportation accounting:

- **Open separate company credit card accounts**: This allows for more efficient spending tracking and management.
- **Make use of up-to-date accounting software**: Many accounting-related procedures can now be automated, reducing the need for user involvement while providing exact and error-free data.
- **Review accounting transactions daily**: Reviewing and reconciling transactions on a regular basis aid in spotting problems and maintaining accurate financial records.

- **Only record earnings when control is handed to the customer**: This practice ensures that revenue is recognized when the service or product is provided.
- **Create cash flow statements, forecasts, and income statements**: These financial reports should be generated at regular intervals, ideally monthly, to aid in decision-making and successful financial management.
- **Hire accounting experts**: As a transportation company grows, it may become necessary to hire an in-house accountant or outsource accounting services to manage sophisticated financial activities such as financial statement preparation, auditing, and making evidence-based financial choices.
- **Adhere to local accounting and tax requirements**: Because transportation businesses frequently deal with fluctuating variable expenses, according to local accounting and tax regulations is critical.

Transportation firms may maintain accurate financial records, make educated financial decisions, and ensure the smooth operation of their business operations by using these best practices.

Kerala State Road Transport Corporation

Corporate Information

The Kerala State Road Transport Corporation was established in 1965 under the Road Transport corporation Act 1950. KSRTC is the state -run public transport corporation in Kerala and is one of the oldest in India. The corporation's financial statements are prepared according to the Indian Generally Accepted Accounting Principles (IndianGAAP). These statements comply with the accounting standard's issued by Institute of Chartered Accountants in India and the provisions of the Road Transport Corporation Act, 1950. The financial statements are prepared on an accrual basis and follow the historical cost convention, unless stated otherwise.

Accounting Practices followed by KSRTC.

- **Commercial Accounts**

  The accounts of Kerala State Road Transport Corporation are kept on the principles of commercial accounting suitably adapted to meet the needs of the corporation and the special nature of its transactions.

- **Remittance and withdrawals**

  The revenue collected by the units are remitted to the treasury to the credit of the KSRTC fund and the amounts required for expenses are drawn by the units from

the treasury by cheques, subject to the limits fixed by the Accountant General from time to time.

- **Books of Accounts**

  The principal book of account is the ledger, and the subsidiary books are the cashbook and the journal. These books are kept by each independent accounting unit including the Chief Office in respect of the transaction which originates there. In addition, the Chief Office keeps a purchase daybook in respect of the purchases and made on credit and a bills payable book for the bills of exchange drawn or accepted by the Chief Office. Transactions are entered in Cashbook, journal, purchase daybook and bills payable book as and when they occur, and the entries are posted in the ledger daily.

- **Monthly closing of unit accounts**

  At the end of each month the ledger accounts are closed, and the debit and the credit balances are extracted in the form of trial balance to test the arithmetical accuracy of the accounts. The units then forward to the Chief Office (Booking Section) a monthly statement of the balances showing the opening balances, the month's transaction and the closing balances in the accounts operated by them. The monthly statement of the balances relating to the transaction of the Chief Office is also similarly prepared and render to the Booking Section of the office.

- **Fund Accounting**

  Fund accounting is a specialised accounting system that is designed to track and report on the use of funds, ensuring that they are used for their intended purposes and that the organization remains in compliance with any legal or regulatory requirements.

- **Accrual Accounting**

  Accrual accounting provides a real-time view of how much money is coming in and going out of the business. This can help the Kerala RTC to monitor its financial activities and manage its finances more effectively.

- **Double Entry System of Accounting**

  The double-entry system is a fundamental and widely adopted bookkeeping system in the accounting world. This helps to minimize errors and discrepancies in the Kerala RTC's financial records.

- **Consolidation of Accounts**

  Apart from the books of accounts kept by it in respect of its own transactions the Chief Office (Booking section) keeps a journal and a consolidated ledger for consolidating the accounts of the corporation. The consolidated ledger is posted by the Booking Section with reference to the summary of monthly transactions prepared by it based on the statement of balances received from the units. After the posting are completed the consolidated ledger accounts are closed and a trail balance is drawn up. Based on these balances a monthly profit and loss account is prepared and submitted to the General Manager. The annual accounts of the corporation are similarly prepared after effecting the necessary adjustments in respect of outstanding liabilities, expenses, and depreciation.

Conclusion

Using integrated systems and current accounting software can assist simplify processes, decrease manual interventions, and improve accuracy and efficiency in accounting duties, all of which are necessary for the proper management of finance and its operations. The Corporation uses double entry system of accounting although the organization has accounting software. They are going to implement completely computerized accounting software named ERP software, in the upcoming financial year 2024. There is no effective costing system in the Corporation. In the coming financial year 2024, they are going to implement an effective costing system for the corporation that should be able to support the management to understand, monitor and evaluate the cost of operations and the cost of maintenance. They are collecting monthly cashflow statements, which will be sent to the government. All activities are carried out with the assistance of the government. The plan will be announced in the budget, and financial performance will be measured through meetings. By adopting and maintaining sound accounting practices, transportations companies can effectively manage their finances, make informed decisions, and maintain a competitive edge in an ever-evolving industry.

Suggestions

- An internal control system is necessary for the proper management of finance
- Implement cost control methods to reduce expenses and increase profitability.
- Hire a firm of cost accountants to provide cost accounting services. This will help the management to understand and evaluate the cost of operations, cost of administrative and overhead expenses, etc… on an activity/department level.

- Efficiently utilize the asset of the corporation, including land, to generate additional revenue.
- Establish a well organised training division and research wing to pursue innovation. This will help to improve the skill of the workforce and promote innovation in the corporation.
- Work with international bus manufactures to come out with new models suited for Kerala. This will help to improve the quality of the buses and make them more efficient.

References

1. E, V. (2019). *performance evaluation of KSRTC with special refernece to Tumkur division*.
2. Jose, L. (2019). Performance Evaluation of Kerala State Road Transport Corporation. *International Journal of Engineering Research and Technology*, *8*(06), 144–149.
3. Induvijayan, D. (2018). pricing policy of KSRTC-A comparative study with Karnataka state road transport corporation. *Intrnational Journal of Business Management and Allied Science*, *5*(1), 43–49.
4. Sreekrishnan, V. M. . (2017). An evaluation of the performance of Kerala State Road Transport Corporation-A Case Study. *International Journal for Applied Research*, *3*(8), 293–294.
5. Saravana, D. . (2016). They play an incredible role in improving the public transport system of kerala: A study based on the satisfaction level of KSRTC passengers. *Advanced Journal*, *1*(5).

Websites

1. keralartc.com
2. http://www.investopedia.com
3. http://www.buckleupintheback.com
4. http://www.countingup.com
5. http://www.gridlex.com

Harmony in Banking: Kerala Bank's Sustainable Development Journey

Discipline: Commerce

Bismi A.
Research Scholar, Government College, Attingal, University of Kerala,
Email: bismi1109@gmail.com

Received: 10 Sep. 2024 | Revised Submission: 11 Oct. 2024 | Accepted: 15 Nov. 2024 | Available Online: 15 Mar. 2025

Abstract

This abstract explores the sustainable development policies implemented by Kerala Bank, a financial institution in southwestern India. Kerala Bank has emerged as a pioneering force in aligning its operations with the principles of sustainable development, seeking to harmonize economic growth with social equity and environmental stewardship. The findings demonstrate that Kerala Bank has been found to promote agriculture, farmers, MSMEs, and women by maintaining the concept of sustainable development.

Introduction

The world of finance has seen a paradigm change in favor of sustainable and ethical banking practices in recent years. Kerala Bank, which was founded in 2019 as a result of the state of Kerala's District Cooperative Banks merging, has been a leader in integrating sustainable development principles into its day-to-day operations. This article examines Kerala Bank's sustainable development initiatives and demonstrates how it has become a role model for other financial institutions. In order to meet the needs of both the current and future generations without jeopardizing nature's capacity to offer vital resources, sustainable development is a key idea in today's society. This idea is especially pertinent in India, where discussions about large dams and ambitious projects generate issues with sustainable development and environmental conservation. "The Development which meets the requirements of the present while not hampering the ability of generations to come to meet their own needs" is how the Brundtland Commission of the United Nations describes sustainable development. Sustainable development is continuous. It is a continuous process that adapts to evolving capacity and technology. "Is sustainable development improving?" is a crucial issue to ponder frequently.

Nevertheless, estimating the total rate of sustainability improvements in Indonesia is challenging because there are currently few, if any, baselines devoted expressly to sustainable development. The goal of this study is to start bridging this gap. Three

dimensions of sustainability are widely used to describe sustainable development: economic, environmental, and social. Rene Passet, an economist, first put up this three-dimensional paradigm in 1979.

In today's world, sustainable development is crucial considering social equality, economic prosperity, and environmental preservation. People must behave ethically towards future generations. Laws govern parts of sustainable development.

Kerala State Cooperative Bank Limited, also known as Kerala Bank, is an Indian cooperative bank established by the Kerala government. In 2019, the Kerala State Cooperative Bank and 14 District Cooperative Banks merged to form the bank. The Kerala State Cooperative Bank was established on November 29, 2019, following the publication of a notification announcing its founding. Kerala Bank stands out as a significant stakeholder dedicated to sustainable development. Kerala Bank promotes environmentally friendly practices, local economic development, and financial inclusion in the Indian state of Kerala. Kerala Bank emphasizes the value of ecological stewardship while positioning itself as a major contributor to the socioeconomic advancement of the state through integrating financial services with sustainable principles.

Review of Literature

- There are so many studies that laid the ground work for the study of sustainability and banking.
- Pierre chollet and Louis- Antoine (2023) Discussed in their article that the response of cooperative banks to SDGs, their drivers, and their managerial implication lead to more important changes.
- Flippi, Bidet and Battesti (2023) Discussed in their article especially focusing on the contribution of SSE purposes, some critical thoughts on the cooperative model and recommendations for reinforcing commitments to achieving sustainable development goals.
- Kinan Salim, Disli, Adam, Dewandaru, Malik (2023) found the results are robust to various econometric specifications and have significant policy implications for investors, bankers, and regulators.
- Their findings of Zedda, Michele, Carmen (2024) demonstrate that "tailor-made" credit scoring models for cooperatives and non-cooperatives outperform a generic one, enhancing credit classification specificity and sensitivity.

Objective

1 To determine Kerala Bank's sustainable development policies.

Description of the Issue

The conversation surrounding sustainability has garnered considerable momentum recently, leading financial institutions such as Kerala Bank to embrace and execute various sustainable development initiatives. Notwithstanding the increasing focus on these endeavors, there is a significant deficiency in the literature about the thorough assessment of the true effects of Keala Bank's sustainable development activities. This study aims to close this gap by thoroughly evaluating the results and efficiency of the bank's sustainability programs. This research aims to provide significant perspectives on the wider domain of sustainable finance and provide Kerala Bank with actionable suggestions to improve the efficacy of its sustainable development initiatives.

Need and Significance of the Study

Investigating Kerala Bank's sustainable development policies is essential since responsible management of resources and environmental stewardship are becoming increasingly important globally. Kerala's distinct socioeconomic environment, defined by elements like high population density, dependence on agriculture, and susceptibility to climate change, calls for a customized strategy for sustainable development in the banking industry. This study is important because it adds to the expanding global conversation on corporate responsibility and sustainable finance, which transcends geographical boundaries. The study endeavors to guide Kerala Bank in formulating future policies and plans, setting standards for additional financial entities, and bolstering stakeholder confidence through a thorough analysis of the bank's sustainable practices. Furthermore, by aligning the bank with global sustainability targets, the findings will strengthen its dedication to responsible banking practices and establish it as a major factor in promoting local and worldwide sustainable development projects.

Research Methodology

The secondary data forms the basis of this investigation. Secondary data were gathered from relevant websites and papers in various periodicals.

Kerala Bank Adheres to Sustainable Banking Practices

The idea behind sustainable development is to satisfy current needs without affecting the capacity of generations to come to satisfy their own. Building a more just and resilient society entails striking a balance between social, environmental, and economic variables. Sustainable development aims to address the problems of inequalities, poverty, and environmental damage by encouraging wise and effective use of resources.

Kerala, a state in southwest India, has been actively involved in efforts to promote sustainable development. Kerala, a state renowned for its distinct social and economic

structure, has made significant progress in poverty alleviation, healthcare, and education. The state has played a leading role in advancing inclusivity and social justice, aiding its general advancement.

Kerala Bank is a noteworthy establishment within the state's sustainable banking landscape. In 2019, the Kerala State Cooperative Agricultural and Rural Development Bank, district cooperative banks, and state cooperative banks merged to establish Kerala Bank. Kerala Bank's main goals are to support and service the rural and agricultural sectors financially and to encourage sustainable development methods.

Kerala Bank supports projects that advance community well-being and the conservation of natural resources to incorporate social and environmental concerns into its banking operations. This aligns with the more general objectives of sustainable development since the bank aims to balance social justice, environmental care, and economic prosperity.

Kerala Bank ensures the equitable distribution of benefits while playing a vital role in promoting economic growth in the region through a range of programs and services. Integrating sustainable practices into the bank's operations enhances the communities it serves by promoting overall resilience and long-term prosperity. In Kerala, sustainable development is a comprehensive strategy for achieving social, economic, and environmental goals. As an important financial institution in the state, the Kerala Bank is essential to promoting and putting into practice sustainable practices, which helps the state continue to develop responsibly and inclusively.

In addition to launching two new programs for women on Women's Day, Kerala Bank also promotes other new initiatives and unique plans for women and farmers. Kerala Bank begins at the grassroots level to enable sustainable development, which must begin at the lowest feasible level of society. Farmers are essential to the development of society, which is why Kerala Bank has created several programs for them, individually and collectively. Encouraging farmers and agriculture is crucial for sustainable development. Kerala Bank offers farmers several programs, including KB FARMERS AWAS HOME LOAN and KB SUVIDA BHAVANA. LOAN, SUVEGA CAR LOAN, KISAAN MITHRA etc.

Kerala Bank has demonstrated a strong interest in similarly promoting MSMEs. The expansion of MSMEs is a means of solving all issues, including unemployment and poverty, and it also represents the nation's growth. A large number of MSMEs is creating jobs. Providing microfinance services strengthens small businesses and encourages local economic growth. Kerala Bank has created several initiatives to empower women and promote gender equality. Kerala Bank has also developed the idea of green banking to

support sustainable development. Examples include the zero-waste concept, paperless banking, and technology integration with sustainable banking practices, including digital initiatives to reduce paper usage. Kerala Bank makes sustainable development possible by offering financial support for improving society and the environment through the bank itself.

Conclusion

The state's dedication to sustainable development is demonstrated by the Kerala Bank, which combines sound financial practices with environmental and social accountability. By consolidating multiple cooperative banking organizations, the Kerala Bank has become a significant driver of economic development, especially among the agricultural and rural domains, while concurrently maintaining the values of fairness and ecological conservation values. Kerala Bank offers its members economic opportunities, which contribute to reducing poverty and inequality, maintaining productivity, and assisting with sustainable farming.in summary Kerala bank has actively involved to fulfil sustainable development goals such as Poverty Eradication and Zero hunger, Food security and gender equality.

References

1. Chollet, P. (2023). Sustainable Development Goals and Cooperative Banks. An international casestudy. June.
2. Filippi, M., Bidet, E., & Richez-Battesti, N. (2023). Building a Better World: The Contribution of Cooperatives and SSE Organizations to Decent Work and Sustainable Development.
3. Sustainability, 15(6), 5490. https://doi.org/10.3390/su15065490 Hanani, N. (2018). An Automated Irrigation System Usin Arduino Microcontroller, 3(May), 2–6.
4. Riegler, M. (2023). Towards a definition of sustainable banking - a consolidated approach in the context of guidelines and strategies. International Journal of Corporate Social Responsibility, 8(1). https://doi.org/10.1186/s40991-023-00078-4
5. Salim, K., Disli, M., Ng, A., Dewandaru, G., & Nkoba, M. A. (2023). The impact of sustainable banking practices on bank stability. Renewable and Sustainable Energy Reviews, 178(January). https://doi.org/10.1016/j.rser.2023.113249

6. Zeddastefano, michelemodina, C. (n.d.). COOPERATIVE CREDIT BANKS AND SUSTAINABILITY TOWARDS A SOCIAL CREDIT SCORING. Research International Business and Finance.

Websites

1. http://www.tandfonline.com

2. http://www.inderscience.com

3. http://sustainabledevelopment.un.org

4. http://en.m.wikipedia.org

A Study on Investor's Attitude Toward Post Office Saving Schemes with Special Reference to Thrissur District

Discipline: Commerce

Amritha Thomas
Assistant Professors, Research Department of Commerce, St. Joseph's College (Autonomous), Irinjalakuda, Thrissur, Kerala, amritha@stjosephs.edu.in

Jitha Thomas
Assistant Professor, Research Department of Commerce, St. Joseph's College (Autonomous), Irinjalakuda, Thrissur, Kerala, jithathomas@stjosephs.edu.in

Received: 10 Sep 2024 | Revised Submission: 08 Dec 2024 | Accepted: 15 Jan 2024 | Available Online: 15 Mar 2025

Abstract - With numerous investment choices available, individuals must select the most beneficial options. Effective planning requires a comprehensive understanding of available investment opportunities and their alignment with financial objectives. Investment decisions influence capital formation and economic growth, making them pivotal for personal and societal development. This study examines investor attitudes toward post office saving schemes in Thrissur District, focusing on awareness, motivational factors, and challenges. Post office saving schemes, offering safety, attractive returns, and tax benefits, remain a significant investment avenue for small savers.

Keywords: Investment, savings, capital formation

1. Introduction

Savings and investment are critical for future financial security and meeting unforeseen expenses. People tend to save and invest to achieve financial independence and uplift their standard of living. Savings play a key role in poverty alleviation and economic development, serving as a reliable source of capital formation.

Post office saving schemes are tailored to encourage small savings and provide a secure, accessible, and tax-efficient investment option. These schemes cater to small savers by offering high interest rates, safety, and liquidity. This study explores investor attitudes toward these schemes, levels of awareness, motivating factors, and perceived challenges in Thrissur District.

2. Review of Literature

Holasagi (2018) highlighted that investors are motivated to choose postal saving schemes for their safety, regular returns, and accessibility. He emphasized the need to create awareness among rural populations regarding these schemes.

Vembu (2018) found that rural women favor post office investments due to the proximity of post offices. He noted that many investors opt for these schemes primarily for tax benefits.

Bhagyashree Teli (2017) observed that while recurring deposits and post office savings deposits are widely recognized, awareness of other schemes remains limited. Increasing awareness could boost deposits in these lesser-known schemes.

Ravindran (2016) revealed that post offices offer diverse financial services, including mutual funds, postal insurance, and small savings schemes. He recommended targeted advertisements to attract more women investors.

3. Research Gap

Despite the relevance of post office saving schemes, limited recent studies have explored investor attitudes, especially in Thrissur District. This study aims to fill this gap by analyzing motivational factors, satisfaction levels, and challenges faced by investors.

4. Objectives of the Study

1) To identify motivational factors influencing investment in post office saving schemes.
2) To assess satisfaction levels regarding these schemes.
3) To examine the challenges investors face when using post office saving schemes.

5. Methodology

The study population comprised investors in post office saving schemes within Thrissur District. Data were collected using an online questionnaire distributed to 100 investors, with 50 valid responses analyzed. A ranking method was employed to identify key motivational factors and challenges.

6. Sampling

The population for this study includes all investors who make theirinvestments in office savings schemes in the Thrissur district in Kerala. Sample units were selected from Irinjalakuda, Kodungallur and Mala.The sample size of the study was finalized to 50. The questionnaires were floated online among the investors. A total of 100 completed questionnaires were received back. Among that, 50 valid questionnaires were considered for analysis. To find out the most important factor that influences the investors in making post office savings schemes and to identify the major problems faced by the investors,rankingmethod was used

Table:1
Profile of Respondents

Gender	Frequency	Percent
Male	31	62
Female	19	38
Age-wise classification of the respondents		
Below 30	19	38
30-40	12	24
40-50	10	20
Above 50	9	18
Others	6	9
Monthly Income (INR)		
10,000 – 20,000	21	42
20,000 – 30,000	16	32
Above 30,000	13	26
Total	50	100

(Source: Survey data)

Table: 2
Satisfaction of respondents about post office saving schemes

Satisfaction About Post Office Scheme	Number	Percentage
Highly satisfied	12	24
Satisfied	15	30
Neutral	16	32
Dissatisfied	7	14
Highly dissatisfied	0	0
Total	50	100

(Source: primary data)

Table: 3
Motivation factors influencing to invest in post office saving scheme

Motivation factors		5	4	3	2	1	Total weight	weighted score	Rank
Risk free investment	f	15	17	10	4	4	50	3.70	3
	fx	75	68	30	8	4	185		
Promote saving	f	18	16	10	6	0	50	3.92	1
	fx	90	64	30	12	0	196		
Easy accessibility	f	8	17	17	4	4	50	3.66	4
	fx	40	68	51	20	4	183		
Child's education & marriage	f	11	12	18	8	1	50	3.48	6
	fx	55	48	54	16	1	174		
Return	f	14	15	12	5	4	50	3.60	5
	fx	70	60	36	10	4	180		
Tax benefit	f	17	12	13	6	2	50	3.72	2
	fx	85	48	39	12	2	186		

(Source: Primary data)

Motivation factors	Total weight	Weighted mean	Rank
Risk free investment	185	3.70	3
Promote saving	196	3.92	1
Easy accessibility	183	3.66	4
Child's education & marriage	174	3.48	6
Return	180	3.60	5
Tax benefit	186	3.72	2

Interpretation: The above table it is clear that respondents choose that savings as first rank (3.92) and child's education & marriage as least rank (3.48) based on motivation factor of investors towards post office saving schemes.

Table: 4
Major problem of the respondents about the post office scheme

Major problems		5	4	3	2	1	Total weight	Weighted mean	Rank
Inadequate information	f	15	12	14	5	4	50	3.58	4 4
	fx	75	48	42	10	4	179		
Problem of liquidity	f	11	21	10	6	2	50	3.66	1 1
	fx	55	84	30	12	2	183		
Problem of technology related services	f	15	10	15	6	4	50	3.52	5 5
	fx	75	40	45	12	4	176		
Poor awareness	f	14	17	10	5	4	50	3.64	2 2
	fx	70	68	30	10	4	182		
Mode of payment	f	11	16	14	5	4	50	3.50	6 6
	fx	55	64	42	10	4	175		
Lengthy formalities and processing time	f	14	13	15	6	2	50	3.62	3 3
	fx	70	52	45	12	2	181		

(Source: Primary data)

Major problems	Total weight	Weighted mean	Rank
Inadcquatc information	179	3.58	4
Problem of liquidity	183	3.66	1
Problem of technology related services	176	3.52	5
Poor awareness	182	3.64	2
Mode of payment	175	3.50	6
Lengthy formalities and processing time	181	3.62	3

Interpretation: The above table show that the first rank of the problem of respondents is liquidity (3.66), second rank is poor awareness (3.64), third rank is lengthy formalities (3.62), fourth rank is inadequate information (3.58), fifth rank is technology (3.52) and sixth rank is delay in processing (3.50).

Findings

- 62percentage of respondents are male and rest 38 percentage are female.
- 38 percentage of the respondents belongs to the age group of below 30, 24 percentage in the group 30-40, 20 percentage represent the age group 40-50 and 18 percentage of respondents belongs to the age group of above 50.
- 42 percentage of the total sample respondents' monthly family income lies between 10000 and 20000, 32 percentage of the respondent's monthly income lies between

20000 and 30000 and 26 percentage of the respondents' monthly family income is above 30000

- 32 percentages of the respondents have neutral satisfaction about the investment, 30 percentages of respondents has satisfied with scheme, 24 percentage of respondent are highly satisfied ,14 percentages of respondents are dissatisfied and there is no highly dissatisfied with post office scheme.
- The first motivation factor that influence respondents to select the schemes is that savings and second motivation factor is tax benefit.
- The major problems of the respondents regarding the post office saving scheme is liquidity and the second is that poor awareness of the investors.

Conclusion

The present study on reveals that most of investors are satisfied with the post office saving schemes. Nowadays postal department has to equip itself by improving its service and saving schemes to satisfy the investors. The study identify that the investors have a great faith and positive attitude towards post office savings schemes because of there is no complicated procedures in making the investments. There are various financial activities introduced. The post office should provide more facilities and offer better schemes for attract a greater number of investors. The Income of the investors also influences them for selecting the Savings and investment Schemes.

References

- Holasagi (2018), Investor behavior and postal investment, International Journal of Innovative knowledge concepts, vol 4, Issue 6, pp.10-17
- Vembu (2018), " Rural Investor attitude towards post office savings schemes in Kodavasal Taluk", International Journal of Pure and Applied Mathematics, Vol 119, Issue 10, pp 1385 -1397
- Bhagyashree Teli (2017), " Role of Post office in Channelising small savings in rural areas", International Journal of Humanities and social science, Vol 4, Issue 6, pp 16-25
- Ravindran (2016) , " Investgment opportunities of postal services sector in India", International conference on Research avenues in social science, Vol 1, Issue 3, pp.226-229
- Mr. Sudhansusekar Nayak and Prasanta Mahapatra, "Investors attitude towards post office deposit schemes ", International Educational Scientific Research Journal, Volume 2 , Issue November 2016
- Balu and Muthumani (2016), "An overview on post office as an avenue for savings", International Journal of Applied Research, Vol. 2(8), pp. 47-52.

Is Cognitive dissonance a stumbling block in workplace? –An Evaluation of the IT sector

Discipline: Management

Dr. Susan Chirayath

Professor, ICFAI University, Jharkhand, Email: susanchirayath@gmail.com

Received: 02 Oct. 2024 | Revised Submission: 15 Feb. 2023 | Accepted: 03 Mar. 2023 | Available Online: 15 Mar. 2025

Abstract - This study was conducted to explore the effects of cognitive dissonance among associates in the IT sector, particularly focusing on internal recruitment, as this area significantly influences and shapes the career trajectories of associates while necessitating critical personal decisions. The study examined various factors, including emotional trading (behavior/belief), attitude, satisfaction levels, expectations, stress, and perception, to assess their influence on associates when faced with decisions that involve conflicting interests. Data was gathered from 144 recruiters responsible for hiring associates in the IT industry. The objective of this study is to ascertain the extent to which cognitive dissonance affects workplace behavior, ultimately impacting organizational outcomes over time. The findings indicate that cognitive dissonance consistently poses challenges within organizations, and if not addressed promptly, it can adversely affect employee behavior, which subsequently influences the organization as a whole.

Keywords: Cognitive dissonance, Emotional trading, Recruitment, Perception, Level of satisfaction, decision making, Expectation, Stress, workplace behavior.

1. Introduction

The theory of cognitive dissonance can be understood as a psychological state characterized by stress or a sense of internal unease that arises from the presence of conflicting ideas, values, beliefs, or behaviors; this phenomenon occurs when an individual grapples with two or more contradictory thoughts, leading to a state of psychological discomfort in a particular context. As human beings, we inherently strive to achieve a sense of harmony among our attitudes, behaviors, beliefs, and practices, and when confronted with an internal conflict or dissonance, our instinctive response is to seek ways to diminish or eliminate this discomfort in order to restore emotional equilibrium. Consequently, when there is a lack of psychological consistency between one's beliefs and actions, individuals often engage in various strategies to modify these elements until they align harmoniously. To alleviate the emotional strain and its associated consequences, the following three strategies are considered effective according to the theory.

- Changing attitudes, behaviors or beliefs
- Acquiring new information

- Reducing the importance of cognitions

This theory manifests itself within the workplace, particularly as a prevalent and significant source of stress for individuals engaged in organizational support roles, including risk management and human resources; the cognitive dissonance that employees encounter has emerged as a widely recognized phenomenon, evident in the less desirable behaviors exhibited by staff, which in turn leads to negative repercussions for the organization. In the realm of human resource management, this dissonance exerts a considerable influence, particularly in recruitment, where such conflicts can yield both direct and indirect effects. In this context, individuals often find themselves compelled to tolerate, support, and perform tasks that may conflict with their ethical beliefs, training, or personal values. Therefore, it is crucial to acknowledge these underlying beliefs and needs, as they frequently serve as the primary motivators shaping individuals' career paths; it is not uncommon for people to navigate these challenging situations, executing their responsibilities even when the actual outcomes diverge significantly from their expectations.

When cognitive dissonance remains unacknowledged within the professional environment, it engenders a plethora of detrimental consequences, including but not limited to withdrawal and disengagement, heightened absenteeism, inappropriate and negative behaviors, as well as deleterious health ramifications. Should cognitive dissonance not be timely and effectively addressed, it has the potential to alienate individuals from the organization, fostering a belief that the sole recourse available is to pursue a workplace stress claim. The origins of cognitive dissonance are frequently rooted in specific management or leadership styles, instances of bullying, discrimination, among other factors. Consequently, it is imperative to ensure that the management approach aligns harmoniously with the needs of the employees. This investigation seeks to explore the myriad sources of cognitive dissonance and its ramifications on workplace conduct. The anticipated outcomes are expected to furnish organizations with invaluable insights, thereby equipping them to mitigate the adverse effects of cognitive dissonance experienced by their workforce.

The inquiry into the impact of cognitive dissonance on workplace behavior is of paramount significance, as organizations serve as environments where individuals are compelled to navigate pivotal decision-making scenarios to fulfill overarching organizational objectives. In the absence of a robust and invigorated organizational climate, the prospect of a prosperous future remains elusive. The manifestation of cognitive dissonance has the potential to undermine the collective motivation of both individuals and the organization as a whole. Prior to addressing the strategies for managing such circumstances within the workplace, it is essential to recognize that escapist

behaviors, including various forms of internal justification, are ultimately counterproductive.

Engaging in such behaviors may allow us to obscure our dissatisfaction to a certain degree; however, the underlying stress will persist, subsequently exacerbating feelings of frustration. Recruitment, inherently intertwined with the management of substantial human resources, inevitably encompasses the complexities of human emotions in daily interactions. Consequently, it becomes imperative to assess the dissonances experienced by individuals and to comprehend their ramifications within the workplace environment. In light of these considerations, this study endeavors to elucidate the various stressors and sources of cognitive dissonance affecting employees within prominent IT corporations, while also proposing strategies aimed at alleviating their dissonance, thereby fostering a more stress-free and productive workforce in the relentless pursuit of establishing a competitive and thriving IT enterprise.

2. LiteratureReview

The concept of cognitive dissonance, initially explored by Leon Festinger in 1957, emerged from a participant observation study centered on a cult that fervently anticipated an apocalyptic flood; this investigation revealed the psychological turmoil experienced by its adherents, particularly those who had wholly devoted themselves to the cult's cause, when the prophesied deluge failed to materialize. While the less dedicated members began to acknowledge their misguided beliefs and sought to rationalize their experiences as mere lessons learned, the staunch followers exhibited a propensity to reinterpret the unfolding evidence, asserting that their unwavering faith had ultimately spared the world from destruction, thereby reinforcing their conviction in the cult's doctrines.

- Festinger's (1957) cognitive dissonance theory posits that individuals possess an intrinsic motivation to maintain congruence between their attitudes and behaviors, thereby striving to avert any form of discord or dissonance. This phenomenon is encapsulated in the principle of cognitive consistency. When a dissonance arises due to a conflict between attitudes or behaviors, it necessitates a modification of some sort to restore equilibrium. Notably, the theory does not assert that the methods employed to mitigate dissonance will invariably prove effective; rather, it suggests that individuals experiencing cognitive dissonance will endeavor to alleviate their discomfort. The exploration of cognitive dissonance has been extensively conducted across various contexts, aiming to elucidate foundational concepts and identify diverse factors that may play a pivotal role in the process of attitude transformation.

What causes cognitive dissonance?

- Forced Compliance Behavior
- Decision-making
- Effort

- **Forced Compliance Behavior:** When an individual is compelled to engage in an action that they are fundamentally opposed to, particularly in a public context, a cognitive dissonance emerges between their internal conviction (I had no desire to undertake this) and their external conduct (I proceeded to do it). This phenomenon of coerced compliance manifests when a person performs an act that starkly contradicts their personal beliefs. Given that the action has already transpired, it becomes impossible to alter the behavior; thus, the individual must seek to mitigate or eradicate the dissonance by reassessing their attitude towards the action they have undertaken.
- **Decision-Making:** The tapestry of life is intricately woven with a multitude of decisions, each of which, as a general principle, tends to amplify cognitive dissonance. The crux of the matter lies in the fact that the act of making a choice irrevocably severs the potential to relish the benefits associated with the alternatives that remain unselected, while simultaneously necessitating the acceptance of the drawbacks inherent in the chosen path. Individuals possess various strategies to mitigate the dissonance that arises from the decision-making process (Festinger, 1964). One potential avenue is the alteration of one's behavior; however, as previously mentioned, this endeavor often proves to be exceedingly challenging, prompting individuals to resort to a range of psychological tactics. A prevalent method for alleviating dissonance involves enhancing the appeal of the selected option while concurrently diminishing the allure of the alternative that has been forsaken, a phenomenon aptly termed "spreading apart the alternatives".
- **Effort:** It appears that we tend to place the highest value on objectives or possessions that necessitate substantial exertion to attain. This inclination primarily stems from the cognitive dissonance that arises when one invests significant effort into a pursuit, only to subsequently appraise it unfavorably. One might dedicate years to the realization of a goal, only to discover that it is ultimately devoid of worth; in such instances, to mitigate the discomfort of this dissonance, individuals may resort to rationalizing their experience by downplaying the duration and intensity of their efforts, or by asserting that the journey itself was rather pleasurable, or that the exertion was not as burdensome as it initially seemed.

- Taking into account the aforementioned elements as a cornerstone for forthcoming inquiries and scholarly investigations, it is evident that a plethora of research has been conducted on cognitive dissonance across various domains; however, there exists a notable paucity of studies specifically addressing its implications within the realms of recruitment and human resource management. The following delineates a selection of studies that have been utilized as foundational references for this particular investigation.
- **Kim and Bay (2017)** formulated contrasting hypotheses grounded in agency theory and cognitive dissonance theory concerning the determination to document an impairment of goodwill. The findings align with the principles of cognitive dissonance, even when accounting for variables deemed significant within the framework of agency theory. The authors ultimately deduced that compelling evidence exists to suggest that agency theory fails to singularly elucidate the outcomes of managerial decisions as reflected in financial reporting data.
- **Andiappan and Dufour (2017)** undertook an investigation into cognitive theory and attribution theory, aiming to construct a process model that elucidates managerial dissonance and the attribution of responsibility following acts of harm. While the prevailing literature posits an inherent managerial endorsement for such decisions, their research posits that there are instances wherein managers perceive certain organizationally mandated acts of harm as superfluous. They meticulously analyzed the myriad challenges encountered by managers throughout each stage of the dissonance resolution process, alongside the potential ramifications stemming from this process. Ultimately, the study culminates in a discussion of the model's implications for moral theorization.
- **Yamaguchi and Abe (2016)** conducted an investigation into the managerial influences that could incite cognitive dissonance, utilizing empirical data derived from e-commerce panels. Their approach involved the meticulous translation of cognitive and emotional precursor factors identified in prior studies into observable metrics via online data, culminating in the development of a hierarchical model designed to account for individual variability and contextual disparities.
- **Sharifiand and Esfidani (2014)** conducted an investigation into the mechanisms by which relationship marketing mitigates cognitive dissonance during the post-purchase phase, ultimately enhancing customer satisfaction and fostering loyalty, with trust and cognitive dissonance serving as mediating variables. The findings revealed that the implementation of relationship marketing strategies led to a notable reduction in cognitive dissonance experienced by consumers after their purchases. Consequently, as the levels of cognitive dissonance diminished,

consumers exhibited heightened satisfaction, which in turn translated into both behavioral and attitudinal loyalty. Furthermore, the research substantiated the mediating influence of trust alongside cognitive dissonance in this dynamic.

- **Yousaf and Gobet (2013)** conducted an investigation into the emotional and attitudinal ramifications stemming from discrepancies between personal attitudes and behaviors, employing a religiously framed iteration of the hypocrisy paradigm. Their research yielded significant evidence supporting the notion that dissonance, engendered by religious hypocrisy, can elicit feelings of guilt and shame, alongside an attitude bolstering effect, in stark contrast to the attitude reconciliation effects observed in prior dissonance studies.
- **Telci, Madenand, and Kantur (2011)** undertook an investigation into the realms of marketing and management perspectives, meticulously analyzing the application of cognitive dissonance theory within the domains of psychology, management, and marketing. The primary objective of this inquiry was to evaluate the extent to which this theoretical framework enhances understanding in these disciplines. While marketers frequently employ this theory to elucidate consumer behavior, its integration into management practices, particularly in addressing human-related challenges, remains significantly underexplored. The researchers ultimately determined that the theory's impact on the corpus of marketing knowledge is indeed considerable.
- **Metin and Camgoz (2011**) conducted an examination of the historical advancements pertaining to the theory of cognitivedissonance. This theoretical framework posits that individual, upon encountering psychological discomfort—often manifesting as elevated stress levels—endeavor to alleviate such dissonance by either modifying their behaviors and cognitive frameworks or by incorporating additional cognitive elements. The essence of cognitive dissonance theory lies in the premise that the coexistence of two psychologically incongruent cognitions engenders a state of dissonance, compelling individuals to seek resolution through behavioral modification, cognitive alteration, or the introduction of new cognitive components. This theory has significantly influenced the trajectory of social psychology, as it effectively contested the reinforcement theory by elucidating the paradox that individuals often develop an affinity for those experiences that induce suffering and discomfort.
- **Kim (2011)**adeptly employed the theory of cognitive dissonance within the realm of the service industry, meticulously examining its impact on critical marketing variables, including perceived value and trust. The results indicated that the applicability of cognitive dissonance theory transcends mere post-decision

scenarios, extending into service contexts to elucidate the mechanisms by which customers interpret information when confronted with word-of-mouth messages that contradict their pre-existing beliefs. Furthermore, the research revealed that cognitive dissonance serves as a significant predictor of re-patronage behavior, even among those customers who express satisfaction with the service received.

- **Lee, Jung, and Nass (2011)** conducted an investigation into the influence of user selection on the social reactions elicited by computer-generated speech. Their findings revealed the presence of social identification and proximate source orientation effects, which persisted even when users exercised their autonomy in selecting a computer voice. However, the anticipated similarity attraction effect was rendered ineffective due to the cognitive dissonance that emerged following user choices. The study further delved into the resilience of social responses, the ramifications for human-computer interaction, and underscored the critical role of user choice in the design of voice interfaces.
- **Cao and Just (2010**) undertook a laboratory investigation aimed at elucidating the phenomenon of cognitive dissonance and its subsequent manifestations in eating behaviors when confronted with food-related risks. The findings revealed that the presence of cognitive dissonance is intricately linked to the degree of familiarity with the food in question. Specifically, when participants were presented with familiar food items, they exhibited a propensity to offer higher bids, articulate lower risk assessments, and eschew risk-related information, thereby indicating the presence of cognitive dissonance coupled with confirmatory bias. Conversely, when faced with less familiar food options, participants displayed a heightened level of caution. Nevertheless, these individuals still demonstrated a tendency to rationalize their eating choices by expressing an increased willingness to pay (WTP). The efficacy of public information initiatives is thus contingent upon individuals' pre-existing knowledge and perceptions.
- **George and Yaoyuneyong (2010)** elucidated the intricate relationship between impulsive purchasing behaviors and the ensuing cognitive dissonance, particularly within the milieu of student shopping during the spring break period. Their empirical investigation revealed that the cognitive dissonance engendered by impulsive acquisitions was markedly more pronounced than that arising from meticulously planned purchases. It was posited that individuals characterized by impulsivity would, in fact, grapple with a heightened sense of cognitive dissonance following unanticipated purchases, in stark contrast to their less impulsive counterparts. Interestingly, the data indicated that impulsive buyers exhibited comparatively diminished levels of cognitive dissonance relative to those who engaged in

premeditated buying. These revelations culminated in the formulation of a novel theoretical perspective, suggesting that the proclivity for impulse buying may serve as a psychological coping mechanism, strategically employed to mitigate the discomfort stemming from the potential disconfirmation of one's expectations.

- **George and Edward (2009)** conducted a thorough investigation into the intricate relationship between the extent of personal engagement in a purchasing decision and the requisite information needed to mitigate the cognitive dissonance that often accompanies such transactions. Their research revealed a compelling insight: the propensity of an individual experiencing dissonance to embrace new cognitive frameworks tends to increase as time progresses following the initial experience of dissonance. In the context of typical purchases, it was observed that individuals with a higher level of involvement encounter a diminished sense of cognitive dissonance compared to their less engaged counterparts. However, despite this lower level of dissonance, the challenge of reconciling it remains significantly more formidable for those who are deeply involved. Furthermore, the study elucidated that purchasing behaviors characterized by meticulous planning, as opposed to impulsive decisions, correlate with an elevated incidence of cognitive dissonance.
- **Koller and Salzberger (2007)** undertook an exploration into the potential applicability of cognitive dissonance within phases of the decision-making continuum that are typically overlooked, specifically the pre-purchase and even the pre-decision stages. Fundamentally, the notion of cognitive dissonance is indeed relevant during the pre-decision phase. From a managerial perspective, it is imperative that marketing strategies aimed at mitigating cognitive dissonance are not confined solely to the post-purchase phase; rather, they should be integrated throughout the entirety of the decision-making and purchasing journey, commencing even before the actual decision is made.
- **Fotuhi *et al.*, (2004)** made a studyto determine if individuals who smoke modify their convictions in a manner that aligns with the principles of cognitive dissonance theory. This objective was achieved by scrutinizing the longitudinal trajectory of belief transformation among smokers in conjunction with alterations in their smoking habits. The findings revealed that smokers exhibit a propensity to justify their actions by adopting increasingly favorable perceptions regarding smoking, and these affirmative beliefs undergo systematic alterations in response to fluctuations in their smoking status.
- **Korgaonkar and Moschis (1982)** conducted a comprehensive examination of the interplay between cognitive dissonance, expectations, perception, and product

performance in shaping product evaluations. This investigation adeptly addresses the methodological shortcomings that have plagued previous experimental inquiries. The outcomes derived from a 2x2x2 factorial design indicate that product involvement serves as a moderating variable within the framework of post-decisional product evaluation. Furthermore, both the theoretical insights and empirical evidence gleaned from this study proffer valuable communication strategies for advertisers.

- **Nicholas and Duke (1977)** conducted an investigation into the foundational aspects of social learning theory, particularly focusing on the analysis of the cognitive dissonance phenomenon. They posited that the locus of control would mediate the alteration of attitudes within a framework of enforced compliance. The quintessential cognitive effect manifested when the emphasis was placed on the autonomy of choice; however, this effect dissipated when the locus of control was excluded as a covariate.
- **Hollon and Chesser (1976)** delved into the fundamental nature of cognitive dissonance, positing that the coexistence of two or more conflicting cognitions engenders a state of psychological tension. The primary focus of subsequent research on dissonance theory has been to delineate the specific circumstances under which the predictions of dissonance are applicable. Findings indicate that such predictions are valid when an individual perceives a disparity between their actual influence and the level of influence they aspire to attain within a professional context.
- **Foran and De Coster (1974)** undertook an experimental investigation involving accountants, employing a cognitive dissonance framework to scrutinize the influence of three independent variables—namely, participation, feedback regarding that participation, and the organismic variable of authoritarianism—on the dependent variable, which pertains to the subjects' attitudes concerning the performance standards they had a role in establishing. The findings of this study suggest that accountants ought to perceive the formulation of performance standards as a multifaceted process that encompasses participation, engagement, voluntary choice, and constructive feedback regarding the outcomes of the planning process. It is only through this comprehensive approach that genuine commitment to the established performance standards can be achieved.
- **Hawkins (1972)** discovered that individuals who express a propensity to worry following decision-making processes typically exhibit elevated scores on assessments of chronic or trait anxiety, in contrast to those who indicate a diminished level of concern, thereby implying that cognitive dissonance may

represent a distinct manifestation of anxiety. He posits that the frequency with which individuals encounter dissonance post-decision is subject to considerable variability among different people. Consequently, while certain individuals may be inherently more susceptible to the experience of dissonance, the likelihood of any given person encountering such dissonance in a particular context is contingent upon the intricate interplay between that individual and the specific circumstances at hand.

- **Oshikawa (1972)** conducted an investigation into the intricate relationship between cognitive dissonance and the quality of service, employing a manipulation of the latter variable across multiple experimental cohorts, thereby facilitating an analysis of the variances in their endeavors to mitigate dissonance. Within the confines of this study, it was posited that dissonance was elicited by the exposure to disparate levels of service quality. The author discerned that the responses elicited post-purchase did not exhibit any significant deviation from those recorded pre-purchase, which implies two critical considerations. Firstly, the transient anxiety experienced after the purchase was minimal, suggesting that the responses were indicative of a more chronic state of anxiety. Secondly, the lack of a significant difference between pre- and post-purchase responses raises the possibility that either the act of acquiring an automobile did not constitute a dissonance-inducing event, or that the employed questions failed to serve as valid metrics for assessing dissonance.

Identification of gap in Dissonance literature

Despite the plethora of research aimed at elucidating the myriad sources, ramifications, and remedial strategies associated with cognitive dissonance in the context of workplace behavior, there exists a conspicuous paucity of investigations specifically targeting the recruitment sector within information technology firms. This is particularly striking given the substantial influx of the workforce into the IT industry, spurred by its remarkable expansion. The advent of digitalization has endowed individuals with an unprecedented array of skill sets, thereby rendering the process of selecting an appropriate career path a formidable challenge in its own right. An in-depth examination of the recruitment practices within IT firms is poised to illuminate the ways in which employees navigate these dissonances and the subsequent repercussions on their workplace conduct.

3. Objectives

In order to meticulously examine the myriad factors that influence cognitive dissonance among employees within the organizational framework, it is focused to

articulate and accomplish the subsequent objectives:

- To assess various factors of cognitive dissonance in employees of IT sector during internal recruitment.
- To assess and compare the level of dissonance in the employees and suggest options in which the impact can be reduced.

4. Hypotheses

To the above objectives, the following hypotheses were set for the study:

H1: There is positive relationship between Emotional Trading of the employees and Workplace Behavior

H2: There is positive relationship between Attitude of the employees and Workplace Behaviour.

H3: There is positive relationship between Expectation of the employees and Workplace Behaviour

H4: There is positive relationship between Level of Satisfaction of the employees and Workplace Behaviour

H5: There is positive relationship between Stress level of the employees and Workplace Behaviour

H6: There is positive relationship between Perception of the employees and Workplace Behaviour

5. Sample and Data Collection

The demographic focus of this investigation predominantly encompasses recruiters tasked with conducting interviews and assigning associates (employees) within their respective organizations, ensuring alignment between job requirements and the qualifications of candidates. The sampling technique employed is non-probability sampling, specifically purposive sampling, wherein the selection of participants is predicated upon the researcher's discernment to identify a sample that is most pertinent to the study's objectives. This approach was deemed essential due to the necessity of acquiring in-depth insights into a particular phenomenon, as opposed to merely deriving statistical generalizations. The primary emphasis of this research is directed towards the information technology sector, which is regarded as the quintessential modern workplace and plays a pivotal role in shaping the nation's future, characterized by a vast array of employee diversity and skill sets within organizations.

The advent of digital transformation has emerged as a significant disruptor, rendering traditional technological advantages ephemeral. Numerous opportunities now exist for individuals to acquire novel and stimulating skills, often accompanied by the prospect of enhanced remuneration. However, the rapid evolution of technology has engendered a rift between IT personnel and management, as both parties grapple with escalating work demands. This predicament resembles a classic chicken-and-egg scenario, wherein decision-makers frequently cite burgeoning workloads as a rationale for withholding training authorization, while staff members find themselves beleaguered by the inability to fulfill assignments due to insufficient skills. Consequently, time that was once allocated for skill enhancement is now diverted to address an ever-growing backlog of tasks. On a global scale, the gap in IT skills has surged by an alarming 155% over the past three years, a reality that can no longer be overlooked, as the absence of requisite skills culminates in heightened employee stress, delays in development and deployment, and inflated operational costs. For the purposes of this study, outreach was conducted with eleven IT companies, resulting in the collection of 144 data sets from recruiters.

6. Research Model

Figure 1: Research Model

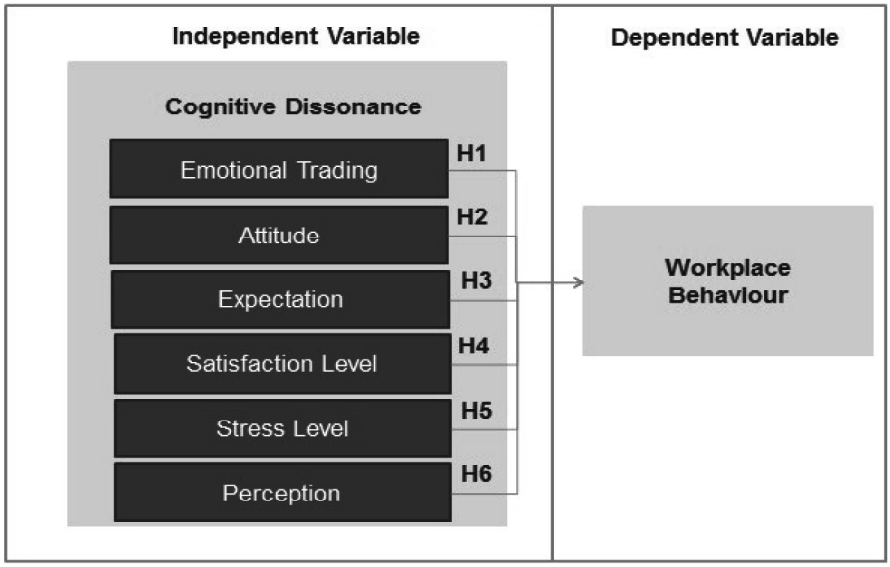

The determinants that shape an individual's conduct within the workplace were evaluated through the lens of six distinct independent variables, namely Emotional Trading, Attitude, Expectation, Satisfaction Level, Stress, and Perception, as illustrated in Fig. 1. In the context of this investigation, these six variables were conceptualized as

integral components of cognitive dissonance. Emotional trading pertains to the phenomenon wherein an individual allows personal sentiments and emotions to influence their decision-making processes. While this emotional involvement can occasionally yield beneficial outcomes, it is predominantly regarded as detrimental to sound decision-making, particularly in the realm of Stock Market Trading. In this context, to mitigate the discordance between workplace behavior and personal convictions influenced by emotions, the term Emotional Trading is employed. Attitude encompasses a constellation of emotions, beliefs, and behaviors directed toward a specific object, individual, or event, often shaped by personal experiences or upbringing, thereby exerting a significant influence on behavior. Although attitudes tend to be relatively stable, they are not impervious to change. Expectations arise from both organizational frameworks and individual associates, with this study focusing specifically on the anticipations held by associates in new job roles, which encompass both tangible and intangible demands.

The level of satisfaction experienced by an individual can be linked to both emotional and material benefits, ultimately resulting in either favorable or unfavorable workplace outcomes. Stress, a multifaceted factor, can stem from a variety of underlying issues related to both professional and personal obligations; however, this study exclusively examines the stressors that associates encounter in their professional environments and the consequent effects on workplace dynamics. While behavior, attitude, and beliefs are pivotal in contributing to an individual's cognitive dissonance, the transformative nature of the environment and the novel dimensions perceived by the individual may also significantly influence critical decision-making processes, thereby affecting workplace behavior.

The sampling process involved engaging with a diverse array of recruitment teams from numerous IT companies, wherein questionnaires were disseminated within their respective departments, supplemented by the utilization of online survey platforms for broader reach. Each questionnaire comprised a total of 26 inquiries, not including demographic information, meticulously categorized according to the independent variables as illustrated in the research model (Fig.1).

Table 1: Cognitive Dissonance Variables used in the survey

Factor	Questions
Behavior	Associates are mostly responsive and provide immediate decision when offered role that does not exactly match their expectations.
Behaviour	Associates mostly agree to the next immediate role/profile offering and do not sit in bench until they get the exact matching profile.
Behaviour	When the pros of the new profile are being conveyed, the associates mostly get convinced and accept the new offer.
Behaviour	Associates rely more on internal job offering than external jobs while in bench.
Behaviour	After accepting to switch to a new role, associates mostly stick to their decisions.
Attitude	Associates mostly show interest in moving to a new role even if it does not relate to the previous role.
Attitude	When offered a challenging role (Example: night shift, additional responsibilities or work timing), associates mostly agree to the offer
Attitude	Associates are mostly willing to take up new skills to meet new profile offerings when requested to do so.
Expectation	Associates mostly express their expectations in a job when contacted for new roles.
Expectation	Associates mostly demand for an onsite/specific job location or any such perks to satisfy their personal needs.
Expectation	Associates only accept the role profiles if it exactly matches their expectations
Level of Satisfaction	Associates are mostly satisfied with their new role while being assigned to them.
Level of Satisfaction	Most of the Associates in their new role complete their commitment period without exiting the project, midway.
Level of Satisfaction	Associate's satisfaction depends on additional perks when asked to change to a new role.
Stress	Associates very often request for a change in current work allocation due to stress.
Stress	Very less number of associates is able to sustain in a stressful work environment.
Stress	Projects with stressful work environment very often have change in associates/job profile requests.
Perception	Associates mostly feel that a change to a new role is better than sticking to a role of their comfort to improve their career
Perception	Associates mostly feel an internal change to a new role is a better means to achieve salary and designation hikes.
Perception	Associates feel pressurized when requested to change roles/acquire new skills for the job requirements.
Perception	Associates mostly feel that RMG understand their associates' requirements and help them to get the most suitable roles.
Work Place Behaviour	Associates who have changed to a new role have mostly displayed success
Work Place Behaviour	Associates who have changed to a new role have never raised stress concerns in their new role
Work Place Behaviour	Associates, who have changed to a new role, rarely return back to their earlier role.
Work Place Behaviour	Associates who have changed to a new role have mostly expressed a positive attitude and acceptable behaviour in their new work environment
Work Place Behaviour	Most of the Projects have expressed positive feedback about the associates who were made to fit in the new role by RMG.

1. Analysis

The array of statistical tools employed in this study encompasses Linear Regression, Correlation, One-way ANOVA, and the Independent T-Test, as the analysis revolves around a singular dependent variable, namely Workplace Behavior, juxtaposed with six independent variables, which include Emotional Trading, Attitude, Level of Satisfaction, Stress, Expectations, and Perception, in addition to several demographic factors such as gender and the respondents' experience. To elucidate the nature of the linear association between the dependent variable and its independent counterparts, Multiple Linear Regression is utilized, thereby quantifying the degree of this relationship. Correlation serves to articulate the linear interconnection between the dependent and independent variables. The One-way ANOVA is employed to scrutinize the means across different groups—specifically, Workplace Behavior in relation to the respondents' experience—thereby assessing whether these means exhibit statistically significant disparities. Furthermore, the Independent T-Test is instrumental in evaluating whether the average values of two distinct groups, categorized by gender, diverge significantly when analyzed in the context of workplace behavior.

2. Results

The data obtained from the administration of questionnaires underwent meticulous analysis, and the statistical significance was rigorously evaluated to draw informed conclusions.

Table 2: Correlation

	Emotional Trading	Attitude	Expectations	Level of Satisfaction	Stress	Perception
Pearson Correlation	-0.554	0.328	0.748	0.572	0.620	0.710
Sig (1 Tailed)	0.000	0.000	0.000	0.000	0.000	0.000

Table 2 elucidates that each of the independent variables—namely Emotional Trading, Attitude, Level of Satisfaction, Stress, Expectations, and Perception—exhibits a statistically significant correlation with the dependent variable, which pertains to workplace behavior, as evidenced by a p-value that falls below the threshold of 0.05, indicative of the established confidence level. Notably, Emotional Trading manifests a negative correlation, in stark contrast to the other variables, which all demonstrate positive correlations. Emotional Trading, characterized by the tumultuous interplay of conflicting thoughts within an individual, can adversely impact employees' performance. Consequently, in alignment with our hypothesis, we accept the null hypothesis, H01, for Emotional Trading, while concurrently endorsing the alternative hypotheses (H2, H3, H4, H5, and H6) for the remaining independent variables.

Table 3: Linear Regression

R	R Square	Adjusted R Square	Std. Error of the Estimate
.962[a]	0.925	0.922	0.18377

Table 3 delineates the values of R and R square, where the R value, denoted in the "R" column, signifies the straightforward correlation and is quantified at 0.962, thereby reflecting a substantial degree of correlation. Conversely, the R square value, as presented in the "R Square" column, elucidates the extent to which the independent variables account for the total variability observed in the dependent variable, Workplace Behavior. In this instance, the R square value is an impressive 0.925, indicating a considerable proportion of explained variance.

Table 4: ANOVA Table

	Sum of Squares	df	Mean Square	F	Sig.
Regression	57.091	6	9.515	281.764	.000
Residual	4.626	137	0.034		
Total	61.718	143			

Table 4 confirms that the regression model predicts the dependent variable significantly well. The "Sig." column in the-Regression row- indicates the statistical significance of the regression model that was run. Here, p value is 0.000, which is less than 0.05, and indicates that, overall, the regression model significantly predicts the outcome variable (i.e., it is a good fit for the data).

Table 5: Table of Coefficients

	Unstandardized Coefficients		Standardized Coefficients	t	Sig.
	B	Std. Error	Beta		
(Constant)	-0.983	0.297		-3.308	0.001
Emotional Trading	-0.195	0.057	-0.147	-3.385	0.001
Attitude	0.213	0.037	0.198	5.823	0.000
Expectations	0.779	0.034	0.643	22.867	0.000
Level of Satisfaction	-0.008	0.046	-0.007	-0.172	0.864
Stress	-0.047	0.054	-0.043	-0.874	0.384
Perception	0.400	0.033	0.463	11.956	0.000

In the meticulous examination of each variable in isolation, the Beta coefficient attributed to emotional trading, quantified at -0.147, intimates that a deviation of one standard deviation within the emotional trading variable will instigate a corresponding modification of -0.147 standard deviations in the dependent variable. This relatively

modest Beta value elucidates a negative correlation of the independent variable with the dependent variable, albeit one that retains statistical significance at the conventional alpha level of 0.05. In stark contrast, the Beta coefficient for 'Attitude' is recorded at 0.198, signifying that a one standard deviation fluctuation in the attitude variable will precipitate a change of 0.198 standard deviations in the dependent variable. This observation suggests a slight yet statistically significant influence of the independent variable on the dependent variable, as evidenced by a significance value of 0.000, which is markedly below the 0.05 threshold. Moreover, the Beta coefficient for 'Expectations' is noted at 0.643, indicating that a one standard deviation alteration in the expectations variable will yield a change of 0.643 standard deviations in the dependent variable. This revelation accentuates a considerable effect of the independent variable on the dependent variable, further substantiated by a significance level of 0.000.

The Beta coefficient associated with 'Level of Satisfaction' is documented at -0.007, which indicates that a variation of one standard deviation in the expectations variable will engender a corresponding decrement of -0.007 standard deviations in the dependent variable. This negative Beta value implies that the effect of the independent variable on the dependent variable is not only minimal but also detrimental, with a significance level of 0.864 reflecting a lack of statistical importance. In the context of 'Stress', the Beta value of -0.043 suggests that a one standard deviation fluctuation in the stress variable will precipitate a reduction of -0.043 standard deviations in the dependent variable, thereby exemplifying a negative yet moderate influence on the dependent variable, which is similarly regarded as insignificant due to the significance value of 0.384. In contrast, the Beta value for 'Perception' stands at 0.463, indicating that a one standard deviation alteration in the perception variable will yield an increase of 0.463 standard deviations in the dependent variable, thereby signifying a considerable positive effect, corroborated by a highly significant p-value of 0.000. The data delineated in Table 5 unequivocally illustrates that, apart from Level of Satisfaction and Stress, all other independent variables exert either a significant positive or negative impact on 'workplace behaviour' as the dependent variable. Notably, 'Expectations' emerges as the most influential variable, exhibiting a Beta of 0.643 and a t-value of 22.867.

Table 6: One Way ANOVA

	Sum of Squares	df	Mean Square	F	Sig
Between Groups	14.638	2	7.319	21.919	0.000
Within Groups	47.080	141	0.334		
Total	61.718	143			

As determined by one-way ANOVA (F = 21.919, p = .000), we do see a statistically

significant association between the experience of the respondents and their views on the impact on workplace behavior due to the factors contributing to the cognitive dissonance of the associate (Table 8). This means that the experience of the respondents significantly impacts their responses.

Table 7: Independent Sample T-Test

	Levene's Test for Equality of Variances		t-test for Equality of Means			
	F	Sig.	t	df	Sig. (2-tailed)	Mean Difference
Equal variances assumed	6.069	0.015	2.128	142	0.035	0.23778
Equal variances not assumed			1.967	86.521	0.052	0.23778

Based on the results shown in the above table (Table 9) which shows the significance value as 0.035, it is seen that there is statistically significant association between the gender and the responses on workplace behaviors when equal variances are assumed between the genders. When equal variances are not assumed, the statistical significance is more than 0.05 and can be considered that there is no significant impact on the responses.

1. Findings

The subsequent delineation encapsulates the findings derived from the analysis:

- In aggregate, the independent variables exert a substantial influence on workplace behavior.
- While all variables exhibit a correlation with workplace behavior, it is noteworthy that stress and satisfaction levels do not significantly affect workplace behavior in the context of our study; conversely, the remaining variables demonstrate a pronounced impact.
- A discernible negative correlation exists between Emotional Trading and workplace behavior.
- Upon the examination of 'Expectations' and 'Perception' as distinct independent variables, it becomes evident that they significantly influence workplace behavior, with ample evidence from the sample underscoring their preeminent correlation with such behavior.

Upon meticulous examination of the survey responses, coupled with the aforementioned statistical analysis, the resultant findings can be elucidated in the following manner:

- The statistical examination presented elucidates that the various factors under consideration collectively exert a significant influence on the workplace conduct of an associate, particularly when confronted with the exigencies of critical decision-making in the recruitment process. This indicates that, when associates are beset by conflicting beliefs and practices, coupled with the compulsion to accommodate such disparities, they often experience a psychologically distressing state that undeniably affects their workplace demeanor. Nevertheless, when these elements are analyzed as discrete variables, it becomes evident that only 'expectations' and 'perception' manifest a direct correlation with workplace behaviors.
- The intensity of any given factor directly correlates with its consequential influence on the individual; thus, should an associate possess an elevated 'emotional trading quotient' in the context of a recruitment scenario, such as assuming a new position, the resultant effect on the individual will be significantly magnified, manifesting through various behavioral expressions in the workplace as a result of the cognitive dissonances experienced.
- It is often noted that individuals exhibit a propensity to pursue novel positions that may diverge from their current obligations, particularly when such prospects are accompanied by both tangible and intangible rewards; this phenomenon is aptly exemplified by the independent variable referred to as 'Expectations.'
- Professionals typically delineate their expectations to the recruitment team while seeking a suitable job profile. Prior to committing to any new opportunities, they meticulously evaluate all available options that align with their aspirations. This behavior underscores the tendency of associates to substantiate their choices based on specific factors that yield personal and professional advantages. In instances where no job roles align with their expectations, they exhibit a willingness to adapt to new opportunities.
- When confronted with such circumstances, associates often experience cognitive dissonance, characterized by a reluctance to articulate their responses and a tendency to deliberate before rendering any confirmation regarding their decisions. This is particularly prevalent when the job profile entails demanding requirements.
- Even in cases where associates acquiesce to a new role, their commitment to such decisions is frequently tenuous.

- In today's technology-driven landscape, associates demonstrate a keen interest in acquiring new skills, even amidst conflicting interests. This is particularly evident when individuals face changes; external positive pressures can facilitate the resolution of their cognitive dissonance. This was corroborated by a significant number of respondents who indicated that associates are inclined to embrace new roles when the advantages and disadvantages of the new responsibilities are thoroughly elucidated.
- Associates who have readily embraced new challenges without succumbing to indecisiveness have often thrived in their new positions, although the prevalence of associates reporting stress-related issues in their new roles remains a notable concern. Even though associates tend to display interest towards internal job offering, when subjected to such situation which might be of conflicting interest, the associates tend to look for role profiles from the external market too.

2. Suggestions

Cognitive dissonance significantly influences a myriad of value judgments, decisions, and evaluations, serving as a pivotal element in the intricate tapestry of human cognition. Cultivating an awareness of the ways in which contradictory beliefs affect the decision-making process can substantially enhance an individual's capacity to render swifter and more precise choices. In light of this understanding, the following points delineate potential areas of focus for the organization to examine the ramifications of cognitive dissonance on workplace behavior.

- It is imperative to elucidate the phenomenon of cognitive dissonance to recruiters, thereby enabling them to grasp the intricate and often stressful decision-making processes that associates endure; this understanding fosters a profound sense of empathy, allowing recruiters to adopt a perspective akin to that of the candidates themselves.
- Furthermore, it is essential to equip recruiters with the skills necessary to discern the psychological triggers associated with cognitive dissonance among associates, thereby facilitating the early identification of individuals who may be grappling with such dilemmas, thus enabling timely and appropriate interventions.
- Additionally, instilling a sense of urgency regarding the new role can be achieved by articulating its advantages, thereby assisting associates in comprehending the potential benefits of the transition and its implications for their future trajectories.
- Senior management must champion a transformative shift in organizational mindset, eschewing the notion of coercively retrofitting job positions with associates who

may lack the requisite skills or willingness. This objective can be further advanced through the implementation of cross-skilling initiatives and the cultivation of a competitive atmosphere that encourages associates to pursue learning and skill enhancement, rather than remaining ensconced in their comfort zones.

- Moreover, leveraging technology to create comprehensive digital profiles of associates from diverse sources, rather than solely relying on self-reported updates within internal systems, is crucial.
- Lastly, the application of data analytics and predictive modeling is vital for accurately gauging market demand and internal organizational needs, thereby preventing any shortfalls in resource allocation when it is most critical.

3. Conclusion

Cognitive dissonance is an omnipresent phenomenon that manifests in various forms throughout the human experience. It is not uncommon for individuals to encounter a sense of unease and an urgent desire to reconcile conflicting cognitions, particularly when these beliefs hold significant importance or are in stark opposition to one another. Should this dissonance remain unaddressed for an extended period, it has the potential to alienate individuals from their organizational milieu, fostering a perception that the sole recourse available is to pursue a claim for workplace stress. Indeed, there are instances where such a course of action seems to be the only viable alternative. The presence of particular incidents and corroborating witnesses can substantially heighten the probability of these stress claims, often culminating in costly and far-reaching repercussions. However, addressing this cognitive dissonance can frequently catalyze beneficial transformations; it does not invariably necessitate sweeping reforms but may simply require a shift in perspective or the cultivation of novel cognitive frameworks.

REFERENCES

1. How does cognitive dissonance affect workplace ... Available at: https://homework.study.com/explanation/how-does-cognitive-dissonance-affects-workplace-behaviors.html
2. Kendra Cherry, Mse. (2025) Cognitive dissonance and ways to resolve it, Verywell Mind. Available at: https://www.verywellmind.com/what-is-cognitive-dissonance-2795012
3. Pearson's product-moment correlation using SPSS statistics (no date) Pearson's Product-Moment Correlation in SPSS Statistics - Procedure, assumptions, and output using a relevant example. Available at: https://statistics.laerd.com/spss-tutorials/pearsons-product-moment-correlation-using-spss-statistics.php

4. One-way ANOVA in SPSS Statistics - Understanding and reporting the output. Available at: https://latrobe.libguides.com/ibmspss/anova

5. Independent t-test in SPSS Statistics - Procedure, output and interpretation of the output using a relevant example | Laerd Statistics. Available at: https://statistics.laerd.com/spss-tutorials/independent-t-test-using-spss-statistics.php

6. Frost, J. (2021, June 8). How to interpret P-values and coefficients in regression analysis. Statistics By Jim. https://statisticsbyjim.com/regression/interpret-coefficients-p-values-regression/

7. Cognitive dissonance theory & examples - https://study.com/academy/lesson/cognitive-dissonance-in-psychology-theory-how-to-avoidit.html#:~:text=Forced%20compliance%3A% 20If%20a%20person, could%20give%20rise%20to%20dissonance.

8. How to reduce cognitive dissonance (no date) EverydayHealth.com. Available at: https://www.everydayhealth.com/emotional-health/cognitive-dissonance/how-why-reduce-cognitive-dissonance-you-feel/

9. Metin, I., Camgoz, S.M., & Ankara, Ç. (2011). The Advances in the History of Cognitive Dissonance Theory. Available at: http://www.communicationcache.com/uploads/1/0/8/8/10887248/the_advances_ in_the_history_of_ cognitive_ dissonance_theory.pdf

10. Halton, C. Cognitive dissonance: What it is, how it works, example, Investopedia. Available at: https://www.investopedia.com/terms/c/cognitive-dissonance.asp#:~:text=Cognitive%20dissonance%20 occurs%20when%20a, lead%20to%20irrational%20decision%2Dmaking.

11. Andiappan, Meena & Dufour, Lucas. (2017). A Difficult Burden to Bear: The Managerial Process of Dissonance Resolution in the Face of Mandated Harm-Doing. Journal of Business Ethics. 141. 10.1007/s10551-015-2697-y.

12. Kim, Y.S. (1970) Application of the cognitive dissonance theory to the service industry, EconBiz. Available at: https://www.econbiz.de/Record/application-of-the-cognitive-dissonance-theory-to-the-service-industry-kim-young-sally/10009126363

Enhancing Patient Outcomes And Operational Efficiency In Healthcare Through Lean Six Sigma: A Comprehensive Review And Future Directions

Discipline: Commerce

Arya A.T.
Research Scholar, Department of Commerce, Government College for Women, University of Kerala, Thiruvananthapuram, Email: aryamulamoodu@gmail.com

Dr. Lissy Bennet
Assistant Professor, Department of Commerce, All Saints College, Thiruvananthapuram, Email: lissy.com@allsaintscollege.ac.in

Received: 24 Oct 2024| Revised Submission: 03 Dec 2024 | Accepted: 07 Mar 2025| Available Online: 31 Mar 2025

Abstract

Healthcare quality management guarantees patient safety, operational optimization, and service excellence. As a hybrid methodology combining Lean and Six Sigma principles, Lean Six Sigma (LSS) has garnered recognition as a formidable approach to process enhancement within healthcare settings. This research is about the overview of LSS methodologies and their applications in the healthcare field. The study explores, through an extensive review of relevant literature, case studies, and real-life examples, how using LSS can help overcome prominent issues in the medical field, including waste reduction, error reduction, and improved patient outcomes. Designed this LSS to ensure efficiency in healthcare processes and improve patient satisfaction. To be effective, though, it has to be established in a culture of continuous improvement. It requires strong leadership and must be tailored to meet the unique challenges in different healthcare settings. In conclusion, the authors believe LSS is a potent vehicle for achieving excellence in healthcare delivery. Still, more studies are needed to investigate its use in underdeveloped parts of the world and specialized areas, which the authors identified as surgical and operating theatre activities.

Keywords*: Lean Six Sigma, Quality Management, Healthcare, Operational Efficiency, Patient Outcomes, Continuous Improvement.*

Introduction

Quality management in healthcare is crucial to maintaining patient safety, operational efficiency, and overall service excellence. With global healthcare systems under continual pressure to provide high-quality care whilst controlling costs and minimizing waiting times, innovative and effective quality management methodologies are paramount-source: World Health Organization (WHO, 2023). The healthcare systems will need new

solutions to improve patient results and reduce inefficiencies. Lean Six Sigma (LSS) is one approach that has gained a lot of popularity over the past few years; it is a methodology that combines waste-reduction aspects from Lean and defect-reduction of Six Sigma.

The roots of Lean Six Sigma lie in the manufacturing sector, where it was developed to improve production processes by eliminating waste and reducing variability. However, its use quickly grew from manufacturing to industries such as healthcare, where it has been employed to increase efficiencies, minimize errors, and enhance the patient experience (George et al., 2023). Adopting Lean Six Sigma in the healthcare sector is especially pertinent given the unique challenges presented by the industry, including complex processes and often fragmented systems. Example: As described on the Institute for Healthcare Improvement (IHI, 2023) website, healthcare organizations grapple with waste, including but not limited to lengthy wait times for patients, medication mishaps, and wasteful use of resources - all of which Lean Six Sigma can target and streamline.

Lean and Six Sigma are essential aspects of healthcare quality management. Lean is centered on waste reduction and flow optimization, while Six Sigma strives for reduced variation and defects through robust data analysis (Smith & Johnson, 2023). Combined, these approaches build a solid structure for ongoing enhancement, allowing healthcare providers to attain superior results for patients while maximizing resource use. Several recent publications have successfully implemented Lean Six Sigma in healthcare, including reduced surgical errors and increased patient flow through emergency departments (Jones et al., 2023; Patel et al., 2023).

While Lean Six Sigma has potential benefits, there are several challenges to its adoption in healthcare. Healthcare organizations face various challenges in adopting these methodologies, such as complex regulatory settings, cultural resistance to change, and specialized training requirements (Brown et al., 2023). Nonetheless, the demand for innovative quality management methodologies similar to Lean Six Sigma unavoidably increases in the healthcare systems with time. Introduction Lean Six Sigma (LSS) is a data-driven approach that seeks to eliminate waste and reduce process variation to enhance quality and performance in organizations, including healthcare settings.

Statement Of The Problem

The nature and quality of healthcare delivery are under extreme scrutiny to improve outcomes, reduce costs,and eliminate waste. Even with the advent of advanced medical technology and improved treatment protocols, countries worldwide still face challenges such as extended patient wait times, medication errors, and poor resource utilization

(WHO, 2023). Such issues could threaten the safety and outcomes of patient care and burden the finances of the healthcare organization, which may have long-term ramifications on the quality of care (Smith et al., 2023).

It is very powerful, too, as medical errors are the third leading cause of death in the United States 28 million to 120 million US citizens are affected yearly. Makary and Daniel (2023) found that medical errors are now the third leading cause of death in the United States, emphasizing the necessity for systemic healthcare process improvements. Compounding decisions with growing inefficiencies in health care delivery, such as redundant processes, delays, and poor care coordination among care providers, further challenges lead to poor outcomes, increasing costs, and diminished patient satisfaction (Patel et al., 2023).

Complicating matters is the fact that healthcare systems are running out of money. As healthcare costs increase worldwide, organizations are challenged to achieve more with fewer resources. This has contributed to an increased focus on cost containment and operational efficiency while not sacrificing the quality of care (George et al., 2023). However, balance is difficult to achieve, particularly in resource-constrained settings, such as underdeveloped and developing countries, where the healthcare system is already at breaking point (Brown et al., 2023).

To address these challenges, Lean Six Sigma (LSS) has proved to be a powerful method for continuous improvement programs in healthcare. Lean Six Sigma (LSS) integrates the waste-reduction principles of Lean with the defect-reduction focus of Six Sigma to create a comprehensive framework for enhancing both the quality and efficiency of healthcare delivery (Jones et al., 2023). Nevertheless, this potential is not without challenges in adopting LSS in healthcare. However, WCM implementation in healthcare organizations can be hindered by cultural resistance to change, insufficient trained personnel, and sustainability issues (Rathi et al., 2022).

This is of particular interest given limited evidence in LMICs regarding the translation of LSS for improved patient care—an area in urgent need of attention in low and middle-income contexts as healthcare systems grapple with significant resource limitations,poor infrastructure, and the burden of disease (Bevan et al., 2005). Furthermore, further studies should explore the long-lasting benefits of LSS on patient and organization health outcomes in complex healthcare contexts such as surgery,anesthetics, and operating theatre (Seelbach & Brannan, 2024).

With these challenges, this paper will discuss how Lean Six Sigma can be leveraged within the healthcare industry to meet the dual goals of improving patient care while increasing operational output. This paper explores the potential of LSD in transforming

healthcare delivery through a review of literature, case studies, and real-world examples. It provides recommendations for its effective implementation in varied healthcare environments.

Objectives

1. To provide an overview of Lean Six Sigma ideas and practices.
2. To assess the Lean Six Sigma methodologies and approaches for healthcare quality management.

Methodology

This paper comprises theoretical research on Lean Six Sigma (LSS) in healthcare quality management. This theoretical piece largely synthesizes the literature and concepts from LSS and the healthcare domain. This approach aims to enhance the understanding of the principles, benefits, and challenges of LSS implementation in a healthcare setting coherently without collecting or analysing empirical data.

The study starts with a literature review consideringacademic publications, conference papers, working papers, and industry reports. The peer-reviewed articles and case studies published in the last decade are collected using PubMed, Scopus, and Google Scholar scholarly databases. The search used keywords like "Lean Six Sigma in healthcare," "quality management in healthcare," and "operational efficiency in healthcare" to ensure the search was relevant and focused. Studies that address the theoretical background of LSS, how it can be implemented in the healthcare environment, and its effect on overall quality management make up the inclusion criteria of this systematic review. Only articles that were empirical or relevant to the healthcare industry were included to create an appropriate review.

The collected literature underwent thematic and focused analysis to identify common themes, patterns, and gaps in the material. The study mainly concentrates on how Lean, Six Sigma, and LSS share a core set of principles and how these methodologies can be applied to resolve challenges in health care, such as reduced medical errors, better patient flow, and improved resource utilization. Yet the thematic analysis in this section also looks at core theoretical concepts that form the basis of LSS that can be adapted to be applicable in the healthcare field, such as the DMAIC (define, measure, analyze, improve, and control) methodology.

By exploring these relevant case studies and empirical evidence from healthcare organizations that have adopted LSS, the paper helps to validate its findings further and make a stronger case for the recommended approach. These examples are based on secondary sources - industry reports, published case studies, etc. to show the theory in

practice. Although primary data is not being collected, these examples offer insights into implementing LSS in healthcare practice and the perceived benefits and barriers to implementation.

The thesis ends with a theoretical synthesis combining the findings of the literature review and the case studies. It seeks to clarify the theoretical framework behind the conduct of LSS in healthcare in the context of quality management. The study also highlights shortcomings in the existing research. It suggests future research directions in adopting the lean Six Sigma approach in underdeveloped healthcare systems and the role of digital health technologies in integrating lean Six Sigma methodologies.

In conclusion, this theoretical paper employs a comprehensive literature review, a thematic analysis of existing literature, a case study analysis, and a theoretical synthesis better to understand Lean Six Sigma in healthcare quality management. This research aims to fill this gap in the literature by conducting a theoretical exploration of Lean Six Sigma and how it rewires healthcare systems.

Theoretical Background

Lean Six Sigma (LSS) is a hybrid methodology that combines Lean and Six Sigma to improve organizational processes by removing waste, reducing variability, and improving overall efficiency. Both methods were initially developed for the manufacturing industry but have proven successful across different sectors like healthcare, using their principles to promote continuous improvement and operational excellence (George et al., 2023).

Lean originated from Jackson's Toyota Production System (TPS), which Toyota developed to make the most out of its manufacturing processes during the mid-20th century. Lean is centered on a single idea: maximizing value to the customer while minimizing waste (Muda). Lean categorizes waste into seven types: overproduction, waiting, transport, over-processing, inventory, motion, and defects (Womack & Jones, 2003). For instance, Lean principles are applied to healthcare operations to identify and eliminate activities that do not add value, streamline processes, and improve patient flow. In this case, Lean is applied to healthcare settings to address specific organizational issues, e.g., decreasing patient waiting time at emergency departments or optimizing the discharge process (Graban, 2016).

Six Sigma, but rather a data-driven methodology, was created by Motorolain the 1980s to reduce defects and process variability. According to Harry & Schroeder (2000), Six Sigma is a statistical term that, when applied to a process, signifies that 99.96% of the opportunities to produce some features of a part are free of defects (3.4 defects per million opportunities). DMAIC (Define, Measure, Analyze, Improve,

Control), the DMAIC framework used in Six Sigma, systematically identifies the root causes of process inefficiencies and how to address them. Six Sigma has been used in healthcare to improve surgical outcomes, reduce medication errors, and enhance the accuracy of diagnostic processes (Antony et al., 2019).

When combined, Lean and Six Sigma form a framework for process improvement called Lean Six Sigma. Lean focuseson improving flow and removing waste, and Six Sigma is the stress through data-driven decision-making to reduce variation and defects. These offer a comprehensive model for quality and efficiency in healthcare systems (Smith & Johnson, 2023). Examples of its successful application can be found in Lean Six Sigma by Grant et al. (2020), such as improving patient discharge processes, reducing hospital-acquired infections, and increasing the efficiency of operating rooms.

Theoretically, systems thinking explains why LSS functions in this situation; as companies are fundamentally interconnected systems, advancements in one area will benefit the system as a whole. This spatial perspective is critical in healthcare, where delays and inefficiencies in one department (patient admissions, for example) can have follows that also affect other departments (surgical scheduling, for instance, or bed availability. This approach allows healthcare process organizations to focus on breaking down systemic issues and addressing them, providing enhanced patient outcomes and operational performance (Rathi et al., 2022).

Another crucial theoretical concept of LSS is continuous improvement, known as Kaizen in Lean terms. Continuous improvement highlights the value of continued efforts to boost processes, products, and services. In healthcare, this translates to building a constant learning and improvement culture, enabling people to observe and act on negatives (Bevan et al., 2005). It is aligned with the overarching aims of healthcare quality management, which are meant to implement safe, effective, patient-centered, timely, efficient, and equitable care delivery (Institute of Medicine, 2001).

To summarize, Lean Six Sigma theory is built upon Lean principles and Six Sigma processes, each supported by systems thinking and the philosophy of continuously improving. By uniting these principles, LSS offers a practical framework for tackling the intricate problems of healthcare quality management. In the healthcare scenario, applying such a model can lead to effective transformation, waste reduction, and better clinical outcome-making. This approach is ideal for a healthcare organization that strives for excellence.

Analysis

Lean Six Sigma

Lean Six Sigma (LSS) is a simple and elusive, innovative methodology that merges the strengths of Lean and Six Sigma to improve processes for the long haul. Lean

emphasizes enhancing flow in the value stream and eliminating waste, whereas Six Sigma seeks to reduce variation and defects through data-driven decision-making. Making them even more effective together by giving them the tools needed to create efficiency of their own if one is leaning towards efficiency and consistency if one is leaning towards Lean (George et al., 2023) is how LSS ultimately fits into complex systems such as in across industries such as healthcare.

By the 1950s, Lean was also on the foundation of the Toyota Production System (TPS). Womack and Jones (2003) suggest that Lean maximizes customer value while minimizing waste (Muda). Lean has been applied to many areas of healthcare, including improving patient flow, reducing wait times, and optimizing resources. For instance, principles have been used to enhance emergency department processes and shorten patient discharge times (Graban, 2016). Lean is not alone in setting out tools to take out expenses; it is a plan for progress and change requiring a move to a state of being of improvement (Miller, 2005).

On the other hand, Six Sigma was introduced by Motorola in the 1980s, and it was a data-driven methodology that was used to reduce defects and process variability. Six Sigma is a statistical term in quality control that strives to limit defects to 3.4 per one million opportunities (Harry & Schroeder, 2000). We use the DMAIC framework (defined as define, measure, analyze, improve, and control) to identify and address the underlying root causes of inefficiencies systematically. In health care, Six Sigma has been utilized to decrease medication errors, increase surgery results, and increase diagnostic correctness (Antony et., 2019)

So, we get Lean Six Sigma, and we call it Lean Six Sigma as a win-win. Lean offers a strategy to improve flow and eliminate waste, and Six Sigma provides techniques they use to reduce variation and data-driven decision-making. Combined, they allow organizations to attain rapid transformational improvement at less cost, potentially increasing productivity, enhancing quality, reducing costs, and creating a safer workplace for patients and staff (Smith & Johnson, 2023).

DMAIC

The **DMAIC** method is a structured framework used in Six Sigma to improve existing processes. It consists of five phases:

- Define: In this stage, the problem is well-defined, and the goals are set. In a healthcare environment, this might mean identifying problems like excessive wait times for patients or ineffective patient check-in systems.

- Measure: Current process performance is measured, and data for each step is collected. The goal is to collect quantitative data to establish a baseline against which improvement can be measured.
- Analyze: The root causes of problems are identified, and the problem is broken down into its components. This may include new processes, staff training, and new technology.
- Control: The last stage ensures that the improvements are maintained over time. It includes steps to monitor and measure progress, develop records, and constantly update control charts to observe the new process (George et al., 2023).
- The DMAIC structure is especially useful in the healthcare sector. It has been used to decrease medication errors, enhance patient flow, and maximize resource utilization (Jones et al., 2023).

Outcomes of Using Six Sigma

- The application of Six Sigma in healthcare has led to several positive outcomes, including:
- **Reduced wait times**: By streamlining processes, hospitals can reduce patient wait times, improving patient satisfaction and resource utilization.
- **Reduced medication errors**: Six Sigma's focus on reducing defects has been instrumental in minimizing medication errors, which significantly harm patients.
- **Lower organizational costs**: By eliminating waste and reducing inefficiencies, healthcare organizations can achieve significant cost savings while maintaining or improving the quality of care (Antony et al., 2019).

Integration of Lean and Six Sigma

Lean Six Sigma combines Lean's whichemphasizes eliminating waste and improving flow, and Six Sigma's focus on reducing variation and defects. In other words, while Lean offers the strategic structure for establishing a process of continuous improvement, Six Sigma provides the specifics for data-driven decision-making and measuring the financial impact of process changes (Smith & Johnson, 2023).

Hit below the belt: This works brilliantly in healthcare. For instance, Lean principles can be used to optimize patient flow in the emergency department, and Six Sigma tools can help decrease variation within the surgical process. Collectively, they can aid healthcare organizations in realizing rapid, sustainable improvements in effectiveness and efficiency (Jones et al., 2023).

Benefits of Lean Six Sigma

The benefits of Lean Six Sigma in healthcare are numerous and include:

- **Better employee and customer experience**: Improving the efficiency of key processes raises employee work experience and patient care experience, resulting in higher satisfaction and loyalty.
- **Improved Processes**: Benefiting from simplified and streamlined processes provides greater control, allowing organizations to seize new opportunities faster, thus increasing successful outcomes.
- **Employees gain skills**: Employees learn essential skills like analytical thinking and project management, making them better contenders for career advancement.
- **Reduced defects**: By preventing defects, organizations can save time, money, and effort spent on identifying and correcting errors (George et al., 2023).

Applications of Lean Six Sigma (LSS) In Healthcare: Practical Examples

Lean Six Sigma (LSS) is used extensively in healthcare to tackle quality, efficiency, and patient safety challenges. It is an integral component of some of the most advanced breakthroughs in healthcare process management, from decreasing wait times to reducing error rates. Here are a few real-life examples of LSS in action in a healthcare setting.

A good example of using LSS is enhancing the functionality and quality of the operation theatres (OTs). The DMAIC method was used to optimize OT processes in an a corporate multi-specialty hospital in Bangalore, India. Delays in surgery start times, inefficient use of resources, and high turnover times between surgeries are examples of such issues that the hospital faces. The hospital utilized the DMAIC framework to pinpoint key issues, gather data on surgical start times and resource usage, and analyze root causes, including lack of communication between departments. Solutions included standardized checklists, better scheduling systems, and staff training. The hospital saw significant decreases in surgery delays, OT utilization,and patient satisfaction (Rathi et al., 2022).

Another real-world example of implementing LSS is the King Abdullah Medical City (KAMC) referral system in Saudi Arabia. The referral process was inefficient, causing delays in patientsreceiving the needed care and creating a communication gap between PCPs and specialists. Using Lean Six Sigma, the hospital pinpointed inefficiencies, gathered data on turnaround times for referrals and examined bottlenecks like manual paper processes and vague referral criteria—strategies to address these challenges included implementing electronic referral systems, standardizing referral

criteria, and training staff. The data indicated the metrics saved both patient time in terms of waiting and lost referral time for providers at KAMC (Jones et al., 2023).

The NHS (English National Health Service) is one of the largest healthcare systems in the world and has implemented Lean Six Sigma to help facilitate transformational change throughout its systems. NHS suffered from problems like long wait times for patients, high rates of hospital admissions, and inefficient use of resources. LSS was implemented to reduce hospital admissions and increase NHS care access. Data was gathered on patient waiting times and admission rates, and inpatients were found for patient flow and resource allocation. Such solutions involved community-based care schemes, expedited discharge protocol, and better management of patient throughput. After the introduction, there were improvements in clinical quality, a reduction in hospital admissions, and more access to care (Bevan et al., 2005)

Medication errors are a leading cause of patient harm in health care. A United States-based hospital has focused on medication errors in inpatient units by applying Lean Six Sigma. This project used the DMAIC method to identify high medication error rates as the problem and then collect data on error types and root causes. Issues that led to errors, such as miscommunication and inconsistent protocols, were targeted through solutions like barcode scanning systems, standard medication administration procedures, and training programs for staff. This drastically decreased medication errors and improved patient safety, saving the hospital money on error-induced complications (Antony et al., 2019).

Emergency departments (EDs) are frequently characterized by prolonged patient waiting times, overcrowding, and suboptimal resource utilization. Lean Six Sigma is in an ED at a Canadian hospital. These included identifying the problem statement (the long wait times to see a physician and overcrowding), collecting patient wait time data and patient length of stay (LOS), analyze bottlenecks (e.g., delays in triage and diagnostic testing). Collaborative responses included rapid triage protocols, rapid diagnostic processes, and efficient bed management systems. As a result, the hospital experienced drastically reduced patient wait times, enhanced patient satisfaction, and improved efficiency in ED resource use (Graban, 2016).

Another application of Lean Six Sigma in improving patient discharge in a UK Hospital was a project that utilized a DMAIC approach, with delayed discharges identified as the problem and data collected around discharge times and bed utilization rates. Solutions included standardized discharge checklists, better communication, and early discharge planning to address root causes such as delays in diagnostic testing and lack of coordination between departments. The impact of this intervention was noteworthy, resulting in substantial decreases in discharge delays, which in turn facilitated

better bed turnover and lowered operational costs for the hospital (Smith & Johnson, 2023).

Data is the basis of Lean Six Sigma principles, and all the examples above show how versatile and practical the methodology is for overcoming problems in the healthcare industry. The Lean Six Sigma (LSS) methodology can transform healthcare operations andcare delivery. From minimizing medication errors, enhancing patient flow, and improving discharge processes, LSS offers a structured and data-informed mechanism to facilitate CQI in the healthcare sector.

Findings

The literature review study concluded:

- **The Impact of Lean Six Sigma in Healthcare**: Lean Six Sigma (LSS) proves to be a fundamental, flexible, and practical methodology for healthcare organizations to enhance the quality and efficiency of services. Lean Six Sigma (LSS) combines Lean and Six Sigma methodologies and represents a holistic process improvement approach that addresses efficiency and quality for healthcare organizations (George et al., 2023).
- **Better Patient Results**: The results of LSS implementation have been truly impressive-shorter wait times, fewer medication errors, higher patient satisfaction, etc. Some LSS hospitals have experienced shorter surgical delays, more streamlined electronic emergency department systems, and improved coordination in referral programs (Jones et al., 2023; Rathi et al., 2022).
- **Operational Efficiency**: The use of LSS has been well-established in improving healthcare processes, resulting in improved resource utilization and cost reduction. Hospitals have successfully implemented LSS for operation theatre schedule optimization, minimization of discharge delays, and enhanced bed management, improving operational efficiency (Smith & Johnson, 2023).
- **Cultural Shift towards Continuous Improvement**: One significant finding is that effective implementation of LSS can only occur after a cultural shift in healthcare organizations. This is essential to the sustained benefit of staff identifying inefficiencies and engaging in continuous improvement activity (Graban, 2016).
- **LSS is still to find footing in underdeveloped parts**: Though LSS has existed for a long time in the world's developed regions, a gap exists in the underdeveloped and developing areas. This segment faces specific challenges, including limited resources and infrastructure, necessitating tailored strategies (Bevan et al., 2005).

Suggestions

- **Continuous Monitoring and Control**: Healthcare organizations must establish ongoing monitoring and control mechanisms to sustain the improvements realized from LSS. The processes should be subjected to periodic audits, performance monitoring, and review to ensure that they continue to be efficient and effective (Antony et al., 2019).
- **Tailored LSS Approaches**: Due to the distinct challenges of various healthcare environments, tailored LSS approaches may be warranted. For instance, also the requirements of simplified LSS models for underdeveloped regions realizing limitations in terms of resources and infrastructureare important to note (Rathi et al., 2022).
- **Less Attention on Surgical and Operating Theatre Activities**: To date, many LSS applications have been found in a variety of administrative and clinical processes, but less research has examined their application to surgical and operating theatre activities. These activities are pivotal to patient outcomes and would greatly benefit from LSS approaches (Smith & Johnson, 2023).
- **Integration with Digital Health Technologies**: Future applications of LSS should explore integrating with different digital health technologies, such as electronic health records (EHRs) and telemedicine. Artificial intelligence and machine learning can also assist us in collecting and analyzing data for LSS initiatives (Jones et al., 2023).
- **Organizational Culture and Support**: LSS requires more than technical knowledge; it also needs a supportive organizational culture and leadership commitment that prioritizes the methodology and provides the necessary resources. This means that LSS initiatives need to be sponsored and resourced by healthcare leaders, and the resources need to be sustained over time despite the temptation and motivation to take them away (Bevan et al., 2005).
- **Global Adoption of LSS**: There is an apparent gap in LSS practice in the underdeveloped world, which can be addressed by funding and international healthcare organizations training and sharing knowledge and rewarding individuals and organizations for implementing LSS (Rathi et al., 2022). This is a great way to bridge the gap and enhance the quality of care worldwide.

Conclusion

In a mission-critical and complex healthcare area, preventing inefficiencies in one domain from negatively affecting patient care and the entire system's performance is

paramount. In summary, Lean has focused on eliminating wastage in manufacturing processes,and in contrast, Six Sigma has focused on affording effectiveness in the front office or upstream processes, including administration and service-based value streams. Accompanied by the theory of the LSS, practical applications to its contribution to the health sector have been exposed, as well as its ability to improve aspects such as patient results, operational efficiency, and costs.

These results underscored how successful LSS is at improving healthcare processes, reducing errors, and improving resource use. Several studies have used LSS successfully to optimize operation theatres, improve referral systems, reduce medication errors, and improve flow in emergency departments. However, successful implementation of these is only possible if there is a change in culture toward continuous improvement, strong leadership, and employee empowerment.

Various developed countries have popularized LSS, which is rarely applied in underdeveloped and developing regions. However, these places also have specific challenges, such as a lack of resources and infrastructure that require customized approaches to LSS implementation. Further research should clarify the implications of LSS approaches for clinical specialties such as surgery and the interaction with emerging digital health technologies.

In the end, Lean Six Sigmais a powerful tool for facilitating continuous improvement in healthcare. Integrating LSS into the healthcare sector empowers organizations to decrease inefficiencies, cut down on waste, and streamline processes within the workforce, allowing for more focused delivery of quality care through higher utilization of health resources for LSS to truly unlock its potential in healthcare systems, a culture of continuous improvement needs to be ingrained, investment made in training and capacity building, and methodologies adopted to the individual contexts of healthcare systems. Lean Six Sigma will continue to be a significant instrument in accomplishing greatness in understanding consideration and operational execution as the medical services area keeps changing.

References

1. Antony, J., Snee, R., & Hoerl, R. (2019). *Lean Six Sigma: Yesterday, today, and tomorrow*. International Journal of Quality & Reliability Management, 36(7), 1129–1152.

2. Bevan, H., Westwood, N., Crowe, R., & Connor, M. O. (2005). Improvement Lean Six Sigma: Some basic concepts. *Innovation*, 1–15.

3. Brown, A., Taylor, R., & Wilson, K. (2023). Challenges in implementing Lean Six Sigma in healthcare: A systematic review. *Journal of Healthcare Quality, 45*(3), 123–135.

4. George, M., Rowlands, D., & Kastle, B. (2023). *What is Lean Six Sigma?* McGraw-Hill Education.

5. Harry, M., & Schroeder, R. (2000). *Six Sigma: The breakthrough management strategy revolutionizing the world's top corporations*. Currency.

6. Institute for Healthcare Improvement (IHI). (2023). *Improving patient flow and reducing delays in healthcare*. Retrieved from https://www.ihi.org

7. Institute of Medicine. (2001). *Crossing the quality chasm: A new health system for the 21st century*. National Academy Press.

8. Jones, L., Smith, P., & Williams, T. (2023). Lean Six Sigma in emergency departments: A case study. *Healthcare Management Review, 48*(2), 89–101.

9. Makary, M. A., & Daniel, M. (2023). Medical error—the third leading cause of death in the US. *BMJ, 353*, i2139.

10. Miller, D. (2005). *Going Lean in Healthcare*. Institute for Healthcare Improvement.

11. Patel, S., Gupta, V., & Kumar, R. (2023). Reducing surgical errors through Lean Six Sigma: A case study. *International Journal of Healthcare Management, 16*(1), 45–58.

12. Rathi, R., Vakharia, A., & Shadab, M. (2022). Lean Six Sigma in the Healthcare sector: A systematic literature review. *50*(January), 773–781.

13. Seelbach, C. L., & Brannan, G. D. (2024). Quality management. *1-8*.

14. Smith, J., & Johnson, M. (2023). Integrating Lean and Six Sigma in healthcare: A practical guide. *Quality Management Journal, 30*(4), 67–79.

15. Womack, J. P., & Jones, D. T. (2003). *Lean thinking: Banish waste and create wealth in your corporation*. Free Press.

16. World Health Organization (WHO). (2023). Global strategy on human resources for health: Workforce 2030. Retrieved from https://www.who.int

The Institution Factor: Exploring Its Moderating Effect On Entrepreneurial Competence And Social Innovation Among Engineering Students

Discipline: Commerce

Badusha Muhammed
Research Scholar, PG & Research Department of Commerce, St. Michael's College, Cherthala, Alappuzha, Kerala, India, Email: badushamuhammed@stmcc.in

Received: 20 Nov 2024| Revised Submission: 05 Jan 2024 | Accepted: 11 Mar 2025| Available Online: 31 Mar 2025

Abstract

With the growing emphasis on entrepreneurship education in India, technical institutions are evolving to equip students with the skills needed to address real-world challenges. This study examines the moderating role of institutional type in the relationship between entrepreneurial competence and social innovation among engineering students. A survey of 390 final-year engineering students from Kerala was conducted, and data were analyzed using Covariance-Based Structural Equation Modeling (CB-SEM) and moderation analysis in AMOS. The results confirm that entrepreneurship training significantly enhances entrepreneurial competence, which in turn fosters social innovation. However, the moderating effect of institutional type reveals that students from direct or autonomous institutions exhibit a stronger relationship between entrepreneurial competence and social innovation compared to those from affiliated colleges. These findings highlight the need for institutions to tailor entrepreneurship education based on institutional structure, ensuring a more effective ecosystem for fostering social innovation. Aligning with Sustainable Development Goals (SDG-4 and SDG-9), this study emphasizes the importance of institutional support in shaping future social entrepreneurs.

Keywords:

Entrepreneurship Training, Social Innovation, Entrepreneurial Competence, Sustainable Development Goals (SDGs), Institutional influence

Introduction

Entrepreneurship is important for driving social change and boosting the economy by creating a good career for the young generation and ensuring the wealth of a nation. It is essential to address the entrepreneurial traits of budding young business visionaries nurtured in educational institutions for a nation's long-term development. As the modern, competitive world demands graduates with strong entrepreneurial skills and knowledge, higher education institutions play a crucial role in fostering entrepreneurship and supporting social innovation among students. These skills are essential not only for

launching and sustaining ventures but also for ensuring their long-term success and societal impact.

Entrepreneurship training has been found to significantly enhance students' ability to engage in social innovation, with entrepreneurial competence serving as a key mediating factor. Additionally, the moderating role of institutional affiliation highlights the need for policy interventions that strengthen entrepreneurial ecosystems in technical institutions. Artificial Intelligence further supports this process by assisting students in practical entrepreneurial tasks such as market research, competitor analysis, and legal aspects, thereby improving their productivity and efficiency (Gupta & Singh, 2024). These insights align with SDG 4 (Quality Education) and SDG 9 (Industry, Innovation, and Infrastructure), emphasizing the importance of integrating entrepreneurship education with social innovation to drive economic growth and sustainable development.

Entrepreneurship is vital for economic growth and social change, yet there is a gap in understanding how technical educational institutions equip students with the necessary skills for sustainable entrepreneurship. While entrepreneurship training aims to enhance competence and foster social innovation, the effectiveness of these programs in technical institutions remains unclear. Additionally, the role of institutional factors, such as differences between government and private institutions, in shaping entrepreneurial competence and social innovation has not been adequately explored. Given the increasing demand for entrepreneurial skills in the modern economy, it is crucial to assess whether these institutions are effectively preparing students to meet real-world challenges. This study aims to bridge this gap by examining the impact of entrepreneurship training on entrepreneurial competence, its role in fostering social innovation, and how institutional differences influence this relationship, aligning with the broader goals of education and industry development.

Literature Review

Entrepreneurship is an active process led by an individual who seeks to harness economic innovation to create new value in the market to meet a specific need(McClelland, 1961). Entrepreneurial training and development are processes that help individuals gain the skills needed to save and build the confidence to explore profitable business ideas and market opportunities for their products or services (Kimwolo, Saina, & Cheserek, 2012).Studies on sustainable entrepreneurship training has shown that it boosts young entrepreneurs' confidence, competence and supports them in starting social enterprises(Hockerts, 2015; Kummitha & Majumdar, 2015; Smith & Woodworth, 2012). Understanding the required competencies of a social entrepreneur allows educational institutions to tailor programs that effectively prepare

students for the challenges of social entrepreneurship, nurturing both entrepreneurial spirit and social innovation skills(Cruz-Sandoval et al., 2022).

Higher education institutions play a pivotal role in nurturing entrepreneurial intentions through quality content, skilled instructors, and an entrepreneurial environment(Saranya, 2023). Social entrepreneurial initiatives within colleges and universities significantly impact students' skill development and their sense of social responsibility. These initiatives often integrate digital technology, enhancing students' capabilities and academic performance(Malhotra et al., 2023). The social entrepreneurship ecosystem in India benefits from strong support structures, including training, funding, incubation, and mentoring. Higher education institutions are integral to this ecosystem, providing resources and fostering an environment conducive to entrepreneurial growth(Izzati, Tamyez, & Kumar, 2023)

Government institutions are benefit from state support in creating incubation infrastructure, which is crucial for fostering entrepreneurship(Loganathan & Subrahmanya, 2025), while private institutions may not be as extensive or structured as in government institutions(Patil & Sathiyanarayanan, 2023). Institutions that lack structured support systems, both financially and in terms of concept development, are less effective those that focus primarily on traditional job preparation rather than entrepreneurial skills(Sharma, 2017). Artificial Intelligence assists students in practical entrepreneurial tasks such as market research, competitor analysis, and legal aspects, thereby improving their productivity and efficiency(Gupta & Singh, 2024).

Entrepreneurship is an active process driven by individuals who seek to harness economic innovation to create new value in the market to meet specific needs(McClelland, 1961). Entrepreneurial training and development equip individuals with the necessary skills and confidence to explore profitable business ideas and identify market opportunities for their products or services(Kimwolo, Saina, & Cheserek, 2012). Research has highlighted that structured entrepreneurship training enhances entrepreneurial competence by fostering creativity, problem-solving skills, and risk-taking behavior, which are essential for entrepreneurial success (Hockerts, 2015). Sustainable entrepreneurship training has been found to boost young entrepreneurs' confidence and competence while providing the necessary support to help them establish social enterprises(Kummitha & Majumdar, 2015; Smith & Woodworth, 2012). Moreover, higher education institutions play a crucial role in shaping entrepreneurial intentions through quality content, experienced instructors, and an environment that nurtures innovation(Saranya, 2023). Institutions that actively engage students in entrepreneurial learning create a strong foundation for venture creation and social impact initiatives.

Understanding the competencies required for social entrepreneurship allows educational institutions to design programs that effectively prepare students for the challenges of launching and sustaining social enterprises (Cruz-Sandoval et al., 2022). Social entrepreneurial initiatives within universities provide students with practical exposure and enhance their sense of social responsibility. Such programs often incorporate digital technology to improve entrepreneurial capabilities and academic performance(Malhotra et al., 2023). The social entrepreneurship ecosystem in India is strengthened by institutional support structures, including training programs, funding opportunities, incubation centers, and mentorship initiatives(Izzati, Tamyez, & Kumar, 2023). Government-supported institutions benefit from extensive incubation infrastructure that fosters entrepreneurship, whereas private institutions may lack structured support systems(Loganathan & Subrahmanya, 2025). Research suggests that institutions focusing primarily on traditional job preparation rather than entrepreneurial skills may be less effective in developing social entrepreneurs (Sharma, 2017).

In addition to structured entrepreneurship training, technology, particularly Artificial Intelligence (AI), is playing an increasingly important role in supporting student entrepreneurs. AI assists students in practical entrepreneurial tasks such as market research, competitor analysis, and legal documentation, thereby improving their productivity and efficiency (Gupta & Singh, 2024). Given the importance of entrepreneurial competence in fostering social innovation, it is critical to explore its mediating role in the relationship between entrepreneurship training and social innovation. Additionally, the type of institution may moderate the impact of entrepreneurial competence on students' ability to innovate socially, as support structures and resources differ between public and private institutions. Based on this literature, we hypothesize the following:

H1: Entrepreneurial competence is influenced by entrepreneurship training

H2: Social innovation is influenced by entrepreneurial competence

H3: Social innovation is influenced by entrepreneurship training

H4: The effect of entrepreneurship training on the social innovation of the students is mediated by entrepreneurial competence.

H5: The effect of entrepreneurial competence on the social innovation of the students is moderated by the type of institutions.

Methodology

Data

Our research targets final-year engineering students at Kerala Technical University who are enrolled in an Entrepreneurship core course and training programs. To ensure diversity, we used cluster sampling and the sample was drawn from fourth-year students across various engineering disciplines. Initially, we formed four clusters: University institutes, Autonomous Colleges, Aided Colleges, and Self-Financing Colleges. We then randomly selected one college from each cluster and listed all final-year students using the admission databanks. Ultimately, we randomly selected students from these colleges, resulting in a total sample size of 390.

Measure

The perception of students regarding entrepreneurship training was assessed using six items adapted from Adekiya and Ibrahim (2016). The perceived entrepreneurial competency level was evaluated through two constructs—Operations and Marketing Competencies (OMC) with five items, and Competencies in Socio-Business and Legal Organization (CSBLO) with four items—based on the work of Cárdenas-Gutiérrez et al., (2021). Additionally, the attitude towards social innovation was measured using five items adapted fromCruz-Sandoval et al., (2022) andGarcía-González et al., (2020). A Likert scale from 1 to 5 was used to evaluate all these constructs.

Analysis

Analysisofnormalityand Commonmethod Bias

Results from the normality test indicate that all factors (Entrepreneurship Training, Organizational Management Competency, CSBLO, Social Innovation, and Entrepreneurship Competency) exhibit skewness values within the acceptable limit for a normal distribution, with skewness values of -0.506, -1.013, -0.279, -0.104, and -0.737, meeting the recommended threshold of -2 to +2 range indicated byGeorge & Mallery, (2010). These findings support the appropriateness of utilizing parametric tests for hypothesis testing. The Harman's Single Factor test results, elucidating only 47.867% of the variance with a single factor, sink below the recommended 50% threshold(Cooper et al., 2020). This indicates that there is no common method bias in the data.

Reliability

The Alpha values for all four factors, ET (.939), OMC (.855), CSBLO (.810) and SI (.872), surpass 0.70, a threshold recommended byNunnally & Bernstein, (1994). This indicates that the scale demonstrates internal consistency and reliability, implying that the items within it effectively measure their intended constructs.

Validity

Based on the EFA results, the Kaiser-Meyer-Olkin (KMO) value of 0.946 indicates excellent sampling adequacy, and Bartlett's Test of Sphericity is significant ($\div^2$ = 5247.900, df = 190, $p < 0.001$), supporting the factorability of the data. The rotated component matrix reveals a clear four-factor structure, with each item loading strongly on its respective component, confirming the construct validity of the measured factors (Entrepreneurship Training, Organizational Management Competency, CSBLO, and Social Innovation).

Table 1 :Discriminant and Convergent Validity

Construct	CR	AVE	MSV	MaxR(H)	ET	SI	EC
ET	0.940	0.724	0.697	0.943	**0.851**		
SI	0.884	0.611	0.379	0.918	0.616	**0.781**	
EC	0.868	0.767	0.697	0.871	0.835	0.610	**0.876**

All AVE values are larger than the MSV values, indicating a high level of discriminant validity among the constructs(Fornell, C., & Larcker, 2016). Convergent validity is supported when the AVE for each construct is greater than 0.50(Chin et al., 1998; Ding et al., 1995).

Table 2: Goodness of fit

Measure	Estimate	Threshold	Source	Interpretation
CMIN/DF	1.856	Between 1 & 3	(Kenny et al., 2015)	Acceptable
GFI	0.928	>0.90	(Hair et al., 2010)	Acceptable
CFI	0.973	>0.95	(Hu & Bentler, 1999)	Acceptable
SRMR	0.041	<0.08	(Hu & Bentler, 1999)	Acceptable
RMSEA	0.047	<0.06	(Hu & Bentler, 1999)	Acceptable

The model fit indices reported in Table 4 indicate that the measurement model demonstrates an overall good fit with the data. The CMIN/DF value of 1.856 falls within the acceptable range of 1 to 3, suggesting good model parsimony and fit to the sample data(Kenny et al., 2015). The GFI value of 0.928 exceeds the recommended threshold of 0.90, indicating that the model adequately represents the observed covariance matrix(Hair et al., 2010). Additionally, the CFI value of 0.973 surpasses the cutoff of 0.95, confirming a strong comparative fit with the baseline model(Hu & Bentler, 1999). The SRMR (0.041) and RMSEA (0.047) are both below their respective

thresholds of 0.08 and 0.06, reflecting excellent fit with minimal residual errors (Hu & Bentler, 1999). Overall, these indices confirm that the model exhibits strong and acceptable goodness-of-fit, supporting the validity of the measurement model.

Results & Discussions

Figure 1: CB-SEM Model

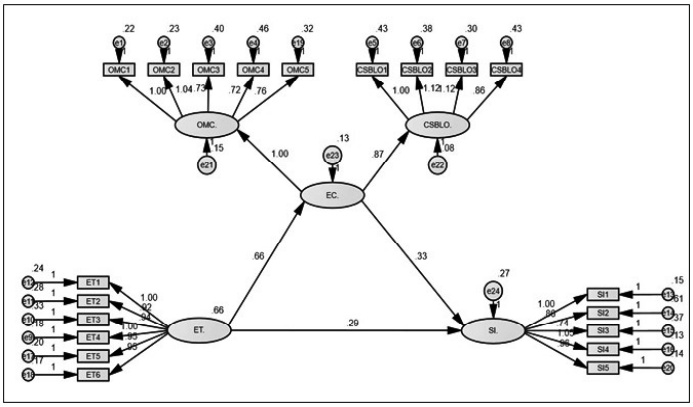

Table 3: Influence of independent variable on dependent variable

From	To	â	p value	Description
Entrepreneurship Training	Entrepreneurial Competence	0.835	<.001	Significant
Entrepreneurial Competence	Social Innovation	0.316	<.01	Significant
Entrepreneurship Training	Social Innovation	0.352	<.01	Significant

The results indicate that entrepreneurship training has a significant and positive impact on entrepreneurial competence (â = 0.835, p < .001), suggesting that structured training programs effectively enhance students' ability to develop entrepreneurial skills. Additionally, entrepreneurial competence significantly influences social innovation (â = 0.316, p < .01), demonstrating that students who acquire entrepreneurial skills are more likely to engage in innovative solutions to social challenges. Furthermore, entrepreneurship training directly impacts social innovation (â = 0.352, p < .01), highlighting that educational interventions not only build competence but also foster students' capacity for social impact. These findings support the argument that

entrepreneurship education plays a crucial role in equipping students with the skills necessary to drive innovation and address societal needs.

Table 4: Mediation Analysis

Path	Direct effect	Indirect effect	Total effect	p value	VAF
ET > EC > SI	0.352	0.264	0.616	<.001	0.750

The mediation analysis results indicate that entrepreneurship training significantly enhances entrepreneurial competence (â = 0.835, *p*< .001), supporting the hypothesis that structured training programs improve students' entrepreneurial capabilities. Furthermore, entrepreneurial competence positively influences social innovation (â = 0.316, *p*< .01), confirming that students with strong entrepreneurial skills are more likely to engage in socially innovative activities. Additionally, entrepreneurship training has a direct positive impact on social innovation (â = 0.352, *p*< .01), suggesting that both direct and indirect effects contribute to fostering social innovation among students. These findings align with previous research emphasizing that entrepreneurship education equips students with the skills to initiate innovative and socially impactful ventures (Kimwolo, Saina, & Cheserek, 2012; Hockerts, 2015). The significant mediation effect further supports the argument that entrepreneurial competence acts as a crucial mechanism through which entrepreneurship training fosters social innovation, consistent with studies highlighting the role of entrepreneurial education in building confidence and competency for sustainable entrepreneurship (Cruz-Sandoval et al., 2022). Thus, the hypothesis that entrepreneurial competence mediates the relationship between entrepreneurship training and social innovation is accepted.

Figure 2: Moderation

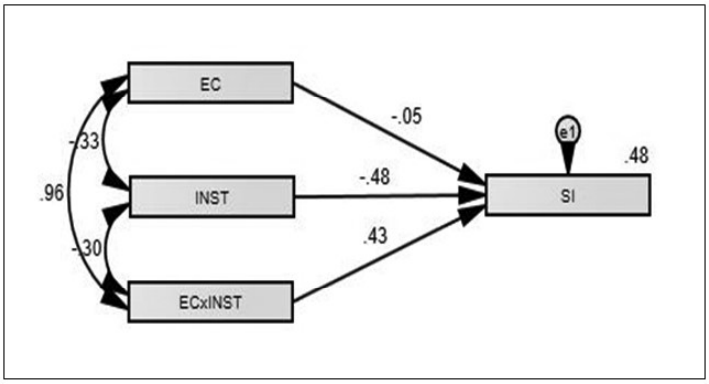

Table 5: Moderation analysis

Path	Estimate (â)	S.E.	C.R.	p-value	Significance
SI <— EC	-0.057	0.141	-0.405	0.685	Not Significant
SI <— INST	-0.646	0.052	-12.395	<.001	Significant ***
SI <— EC × INST	0.171	0.053	3.223	0.001	Significant **

The moderation analysis indicates that institution type significantly moderates the relationship between entrepreneurial competence and social innovation, as shown by the interaction effect (â = 0.171, p = .001). Students from Direct/Autonomous institutions exhibit higher entrepreneurial competence (M = 3.51) and social innovation levels (M = 3.08) compared to those from Affiliated colleges (entrepreneurial competence: M = 3.10; social innovation: M = 2.28). This finding suggests that structured institutional support, such as incubation, mentoring, and funding, enhances students' ability to translate entrepreneurial competence into social innovation (Saranya, 2023; Izzati et al., 2023). Consequently, the hypothesis that institution type moderates the effect of entrepreneurial competence on social innovation is supported. Interestingly, the direct effect of entrepreneurial competence on social innovation becomes negative in the moderation model (â = -0.057, p = .685), though it is not statistically significant. This result suggests that without adequate institutional support, entrepreneurial competence alone may not be sufficient to drive social innovation. Previous research similarly highlights that government-supported institutions have stronger entrepreneurial ecosystems than private or affiliated colleges, where structured support is often lacking (Loganathan & Subrahmanya, 2025; Patil &Sathiyanarayanan, 2023). These findings underscore the importance of strengthening entrepreneurship-focused policies and institutional support mechanisms, particularly in affiliated colleges, to bridge the gap in fostering social innovation skills among students.

Conclusion

This study underscores the significant role of entrepreneurship training in fostering entrepreneurial competence and social innovation among students in technical institutions. By equipping students with the necessary skills to create and implement innovative solutions, entrepreneurship education directly contributes to the objectives of Sustainable Development Goal 4 (Quality Education) and Sustainable Development Goal 9 (Industry, Innovation, and Infrastructure). The findings indicate that structured entrepreneurship training enhances students' ability to identify and address social challenges, reinforcing the importance of integrating social innovation into entrepreneurship curricula.

Furthermore, the study highlights how institutional support mechanisms, such as incubation centers, mentoring, and funding opportunities, can significantly impact students' entrepreneurial success. Strengthening these support systems, especially in affiliated institutions, can help bridge the gap in fostering social innovation and ensuring that students receive holistic entrepreneurial education.

Future research could examine the long-term impact of entrepreneurship training on students' career trajectories, particularly in sustaining business ventures and driving social innovation beyond graduation. Investigating how cultural, economic, and institutional factors influence the effectiveness of entrepreneurship training programs would provide deeper insights into optimizing these programs across different contexts. Additionally, expanding research to include diverse educational settings, such as vocational training institutions and interdisciplinary programs, could offer a broader understanding of how entrepreneurship education can be tailored to varying student needs. Future studies could also assess the effectiveness of integrating experiential learning methods, such as real-world entrepreneurial projects and industry collaborations, in enhancing both entrepreneurial competence and social innovation skills. Strengthening these aspects in entrepreneurship education will ensure that students are well-equipped to contribute to sustainable economic and social development.

Managerial Implications

The findings suggest several key managerial implications for policymakers, educators, and institutional leaders. First, strengthening institutional support through incubation centers, mentorship programs, and structured entrepreneurial ecosystems can enhance students' entrepreneurial competence and social innovation capabilities. Second, governments must bridge the institutional gap by ensuring equitable access to resources, funding, and infrastructure, enabling students across diverse institutions to benefit from entrepreneurship training. Third, universities should integrate social entrepreneurship modules and leverage digital tools, including AI-based training, to enhance skill development for social innovation. Fourth, fostering an entrepreneurial mindset through workshops, resilience training, and psychological support can help students overcome risk aversion and develop a proactive approach to entrepreneurship. Lastly, collaboration between institutions and stakeholders is essential to create a holistic entrepreneurial ecosystem that nurtures young entrepreneurs and promotes sustainable business models.

References

1. Cárdenas-Gutiérrez, A. R., Bernal-Guerrero, A., & Montoro-Fernández, E. (2021). Construction and validation of the Basic Scale of Entrepreneurial Competencies for the Secondary Education level. A study conducted in Spain. *PLoS ONE*, *16*(4 April), 1–21. https://doi.org/10.1371/journal.pone.0249903
2. Chin, W. W., Chinn, W. W., & Chin, W. W. (1998). The partial least squares approach to structural equation modelling. In Marcoulides G. A. (Ed.). *Modern Methods for Business Research*, *295*(2), 295–336.
3. Cooper, B., Eva, N., Zarea Fazlelahi, F., Newman, A., Lee, A., & Obschonka, M. (2020). Addressing common method variance and endogeneity in vocational behavior research: A review of the literature and suggestions for future research. *Journal of Vocational Behavior*, *121*(July), 103472. https://doi.org/10.1016/j.jvb.2020.103472
4. Cruz-Sandoval, M., Vázquez-Parra, J. C., & Alonso-Galicia, P. E. (2022). Student Perception of Competencies and Skills for Social Entrepreneurship in Complex Environments: An Approach with Mexican University Students. *Social Sciences*, *11*(7). https://doi.org/10.3390/socsci11070314
5. Ding, L., Velicer, W. F., & Harlow, L. L. (1995). Effects of Estimation Methods, Number of Indicators per Factor, and Improper Solutions on Structural Equation Modeling Fit Indices. *Structural Equation Modeling: A Multidisciplinary Journal*, *2*(2), 119–143. https://doi.org/10.1080/10705519509540000
6. Fornell, C., & Larcker, D. F. (2016). Evaluating structural equation models with unobservable variables and measurement error. *Journal of Marketing Research*, *18*(1), 39–50.
7. García-González, A., Ramírez-Montoya, M. S., de León, G., & Aragón, S. (2020). Social entrepreneurship as a transversal competency: Construction and validation of an assessment instrument in the university context. *REVESCO Revista de Estudios Cooperativos*, *136*(136), 1–16. https://doi.org/10.5209/REVE.71862
8. George, D., & Mallery, M. (2010). *Testing normality including skewness and kurtosis*.
9. Gupta, M., & Singh, M. (2024). The Impact of Artificial Intelligence for Advancement in Entrepreneurial Education. *European Conference on Innovation and Entrepreneurship*, 218–224.

10. Hair, Joseph, F., Black, W. C., Babin, B. J., & E., A. R. (2010). Multivariate data analysis. *In Multivariate Data Analysis*, 785–785.

11. Hockerts, K. (2015). The Social Entrepreneurial Antecedents Scale (SEAS): a validation study. *Social Enterprise Journal*, *11*(3), 260–280. https://doi.org/10.1108/sej-05-2014-0026

12. Hu, L. T., & Bentler, P. M. (1999). Cutoff criteria for fit indexes in covariance structure analysis: Conventional criteria versus new alternatives. *Structural Equation Modeling*, *6*(1), 1–55. https://doi.org/10.1080/10705519909540118

13. Izzati, N., Tamyez, P., & Kumar, S. (2023). Cross-country Analysis of Social Entrepreneurship Ecosystem and Support System in India and Malaysia. *SCMS Journal of Indian Management*.

14. Kenny, D. A., Kaniskan, B., & McCoach, D. B. (2015). The Performance of RMSEA in Models With Small Degrees of Freedom. *Sociological Methods and Research*, *44*(3), 486–507. https://doi.org/10.1177/0049124114543236

15. Kimwolo, A., Saina, C., & Cheserek, G. (2012). Effects of credit training skills on sales performance among women entrepreneurs in Elgeiyo Marakwet County, Kenya. *Journal of Emerging Trends in Economics and Management Sciences*, 945-950.

16. Kummitha, R. K. R., & Majumdar, S. (2015). Dynamic curriculum development on social entrepreneurship - A case study of TISS. *International Journal of Management Education*, *13*(3), 260–267. https://doi.org/10.1016/j.ijme.2015.05.005

17. Loganathan, M., & Subrahmanya, M. H. B. (2025). Assessment of the impact of government support to technology business incubators in India. *Innovation: The European Journal of Social Science Research*, 1–19. https://doi.org/10.1080/13511610.2024.2446534

18. Malhotra, S., Anil, K., & Kaur, A. (2023). Impact of Social Entrepreneurship on Digital Technology and Students ' Skill Set in Higher Education Institutions/ : A Structured Equation Model. *International Journal of Experimental Research and Review*, *35*, 54–61.

19. McClelland, D. C. (1961). *The Achieving Society.* New York: Van Norstrand Co Inc.

20. Nunnally, J. C., & Bernstein, I. H. (1994). *Psychometric Theory*. McGraw-Hill.

21. Patil, K. K., & Sathiyanarayanan, M. (2023). I5 Framework/ : Institutions-Industries-Interactions Innovations-Incubators for Strengthening Start-up Ecosystem in Higher Education Institutions. *International Journal of Emerging Technologies in Learning*, *18*, 148–163.

22. Saranya, S. P. R. (2023). Empirical study on the role of passion , individual differences , and innovativeness between entrepreneurship education in higher education institutions and entrepreneurial intention/ : A moderated mediating model. *Review of Education*, *July*, 1–27. https://doi.org/10.1002/rev3.3412

23. Sharma, L. (2017). Teachers ' perspective on inûitutional barriers to academic entrepreneurship – a case of Uttarakhand. *Teachers and Teaching: Theory and Practice*, *0602*, 1–15. https://doi.org/10.1080/13540602.2016.1205017

24. Smith, I. H., & Woodworth, W. P. (2012). Developing social entrepreneurs and social innovators: A social identity and self-efficacy approach. *Academy of Management Learning and Education*, *11*(3), 390–407. https://doi.org/10.5465/amle.2011.0016

An Examination of Discrimination Faced by Immigrant Indian International Students in Canada

Discipline: Sociology

Linimol R.J.

Research Scholar, University of Kerala, India, Email: linimolrj@gmail.com

Dr. Carvalho Faustina Cicila

Assistant Professor, Department of Commerce, All Saints' College, Thiruvananthapuram, Kerala, India, Email: cicila.com@allsaintscollege.ac.in

Received: 04.03.2025 | Revised Submission: 11.04.2025 | Accepted: 28.04.2025 | Available Online: 30.04.2025

Abstract

Student migration into Canada has increased substantially over the past few years. Despite many people migrating to Canada, discrimination experienced by international students often remains poorly documented and examined. This article examined these conditions from an academic and experience-based view in the form of a case study analysis, based on secondary data. Analysis of these conditions over the past 7 years revealed significant changes, and concerning conditions in the Canadian settings, where international students' experience of discrimination in various forms is on the highest side of the scale, despite universities, national and state governments having various regulations in place. Despite some positive developments, discrimination remains at large, among international students, both in university settings and social settings. Discussions followed current academic evidence and practical evidence identified in this context, and recommendations were drawn from this evidence.

Keywords: *Immigration, Migrant students, Discrimination, Canada*

1. Introduction

There has been a constant flow of international students and student migration to Canada over the past few years. Between 2019 and 2023, study permits allocated by Canada increased from 6,37,780 to 10,40,985 (TOI Education, 2025). Despite constant changes happening to immigration policies, student immigration has seen a continuous rise in Canada (TOI Education, 2025). As of 2024 statistics, Canada hosted more than one million international students in 2023. This has also triggered new changes in terms of protecting students from labour exploitation (Isai, 2024), indicating how immigrant students, especially are exploited in foreign countries. Despite popular claims, at least one-third of the people living in Canada have experienced discrimination in one form or

the other (Government of Canada, 2024). This article looks at these events from the lens of international students, in the form of a narrative literature review of these issues.

2. Objectives of the Study

- To analyse the discrimination faced by international students in Canada
- To critically discuss current regulations and policies aimed at curbing discrimination in Canada
- To make recommendations on how to reduce racial and other forms of discrimination experienced by international students in Canada.

2.1. Significance of the Study

As student migration is on the rise in many Western countries, including Canada, the USA, and most of Europe, understanding the issues faced by international students in these regions is essential. Canada being a major destination for migrant students from countries like India, assessing these situations reporting them, and articulating current academic debates surrounding these conditions is important in bringing attention and awareness among academic communities, as well as aspiring students. This can help in further educating students and even shedding light in the right direction for new policy development to limit and prevent discrimination of students in racial or any other forms.

3. Materials and Methodology

3.1. Research Design

The research design followed here is a secondary data study, following a descriptive research design.

3.2. Data Collection

The data collection strategy employed collecting published academic articles from various journals and secondary data collected from online sources, related to the research problem. Articles were selected based on their primary focus on immigrant students, and discrimination conditions they experience, within the context of Canada.

3.3. Study Area

The study area focused specifically on Canada, immigrant students, and discrimination of various forms.

3.4. Tools and Techniques

The study followed a qualitative methodology. Hence, the method of analysis used was a case study analysis, by discussing current academic debate under various themes, coupled with real evidence collected from secondary sources, like News Articles, and Government publications.

4. Results

4.1. Concept of Discrimination and its Effects on Migrant Students

Discrimination is the unequal treatment of individuals in the same situation, same society, or same settings based on one or more characteristics that differentiate them from the rest (Fibbi, Midtbøen& Simon, 2021). While this simplistic view often encompasses the underlying factor, the concept of discrimination is multifaceted, mainly because it is a matter of comparison, and it is also a matter of favourable and unfavourable treatment of different groups of people (Fibbi, Midtbøen& Simon, 2021). Another key factor associated with discrimination in this case is the concept of intersectionality, which is the view that race, class, gender, sexuality, ethnicity, nationality, ability, age etc. create complex social inequalities (Fibbi, Midtbøen& Simon, 2021). Some of the consequences associated with students' experiences of discrimination include but are not limited to issues with developing relationships, poor behaviour, poor academic performance, limited development of academic competence, and overall lower life satisfaction, not to mention the heightened risks of substance abuse among those experiencing such events (Metzner et al. 2022).

4.2. Discrimination in Canada

Current data relating to students' experiences in Canada in general shows a significant level of discrimination experienced by people from racial and ethnic minorities (see Figure 1). Even though students expressing individual experiences have remained somewhat low, there is a general understanding of such type of discrimination among students at large, and most students have also agreed this is a factor they come across (Angus Reid Institute, 2021).

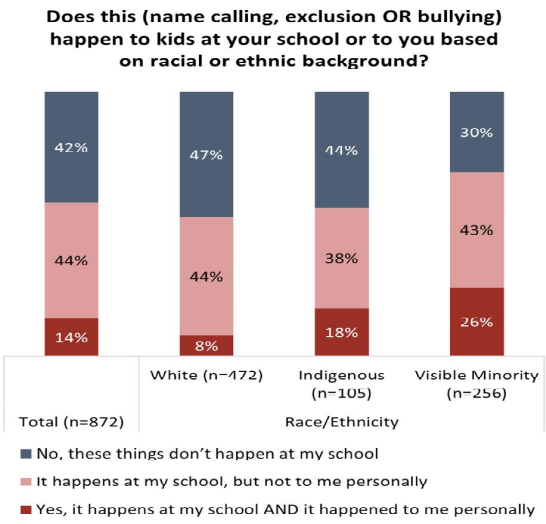

Figure 1 - Students experiencing discrimination in Canadian settings (Source: Angus Reid Institute, 2021)

Likewise, a study conducted by Saunders, Guan, Macpherson, Lu & Guttmann (2020) also found that discrimination, including physical assaults faced by immigrants in Canada, did not reduce, depending on the time they spend in the country. As per 2019 polls conducted on a similar issue, Canadians suggested racism is not a major problem needing considerable attention (Abedi, 2019), while statistics indicate otherwise. Students have experienced a strong level of psychological distress after immigrating to Canada (Firat& Noels, 2021). Many of these issues have been associated with cultural distancing and cultural differences. Major issues identified in this case Monoculturalism, which is a major approach to cultural thinking where people identify with a single culture, and it may cause conflict among others, especially when people are not ready to understand and identify other cultures or their existence (Firat& Noels, 2021). In comparison, hybrid cultural thinking shows a blend of multiple cultures and identities, thereby developing a sense of compatibility between two or more such cultural identities (Firat& Noels, 2021).

Current data clearly shows international students experiencing discrimination at schools/ universities and workplaces, especially in hiring processes, and even experiencing biased decisions and engagement at work (Le & Sarwar, 2024). According to the observations made by Le & Sarwar (2024), part of these issues was due to the differences in languages, and the barriers they presented, in addition to the cultural differences that affected how well employees, employers, or colleagues were able to work together. These were identified to be a major issue faced by international/migrant students because they often gain very limited time to adapt to foreign settings and are often exposed to these discriminations at an early stage.

While investigating the presence of diversity, inclusion and equality concerns and practices in Canadian universities, Tavares (2024) found that international students still feel excluded from the larger socio-cultural landscape present in universities, especially in social groups. This has been observed as a common condition, despite the commitments and tactics implemented by universities in tackling equality, diversity and inclusion (Tavares, 2024). At the same time, however, international students with limited foreign experiences are more likely to experience social and personal challenges in Canadian universities, in addition to language-related challenges, found Worae& Edgerton (2023).

4.3. Current Policies and Regulations to Prevent Discrimination in Canada

Several issues were identified concerning ensuring racial diversity and inclusion in Canadian educational settings.

Lack of Data

Allegations are also made by migrant student researchers and scholars, as well as researchers experiencing discrimination (Menezes, Henry & Agarwal, 2022). According to Menezes et al. (2022), these issues are prevalent in Canada largely due to the lack of action from concerned parties, and due to the lack of precise data in this area. A 2017 article published on the same claimed Universities have very little insightinto their racial diversity and more specifically, the actions and policies in this area (McDonald & Ward, 2017). While these conditions are slowly changing, especially since more Canadian universities and educational institutions now have espoused commitment to ensuring racial diversity, inclusion, and more importantly support, there is still a strong gap between rhetoric and the actual practice, argue Cukier, Adamu & Elmi (2021).

Regulations

While most of the universities have dedicated policies and regulations aimed at curbing discrimination of different types (Hussain, 2023), migrant students do not necessarily come across such issues in their schools/universities alone. From a legal and regulatory point of view, Canada has strong regulations in place, which are collectively called the Race and Equality Rights in Canada and has taken a more collective and community-based approach (Service Canada, 2024). Various regulations, such as the Anti-Racism Act, of 2017 (Law Document English View, 2014) also address these issues at a legal level. However, claims made by various parties question the effectiveness of such policies, citing extensive accounts of racial discrimination events reported by individuals (International Service for Human Rights, 2024). Thus, this comes down to a matter of action and inaction, and enforcement of existing policies and regulations, both atthe university and legal/regulatory levels.

5. Discussions

Several themes were identified in the paper.

5.1. Presence of Discrimination in Canada

First, experiences of racial discrimination or other forms of discrimination have not declined in Canada, whether it is in the case of students or the public. Even though the public in the country seems to have disagreements related to how friendly the country is, and believing racism is not a major issue they are facing, current statistics and academic evidence are pointing towards a much bigger problem. Considering how experiences of racial or other forms of discrimination affect students and their overall learning, development, and well-being, especially their student performance and life satisfaction, as pointed out by Metzner et al. (2022), strong ramifications can be expected from

such events. More importantly, the study found that discrimination does not stop at psychological effects, but it often extends towards physical abuse, such as assaults (Saunders et al. 2020). In such instances, the consequences can be severe. The presence and role of cultural distance, language-based differences, and even colour-based discrimination or racial and ethnic profiling is also evident in Canada, and a prevalent issue faced by international students. In other words, biased treatment, feeling left out in groups and clubs, poor treatment from others, etc. are some of the common issues identified here.

5.2. Policies and Practices

Looking at the second objective of the ongoing policies and regulations, both universities and state/national governments have established strong regulations and policies to remove these issues and the occurrence of such events. However, regardless of these practices, students in universities continue to experience these issues. On the one hand, universities' understanding of racial and other forms of diversity conditions has increased. While they are taking steps to ensure better management of diversity, equality and inclusion (Cukier et al. 2021). While data remains a major issue, which could prevent universities from implementing necessary actions (Menezes et al. 2022), current gaps are more prevalent in how international or migrant students are exposed to discrimination largely in wider social settings other than universities. Despite practices aimed at limiting discrimination of various forms, including racial and ethnic, frequent occurrences of such events are still reported (International Service for Human Rights, 2024). Hence, it shows further improvements are needed in these areas.

5.3. Recommendations

Collective action is needed to improve the current situation. Despite discrimination being a major issue, the public tends to believe it is not a frequent issue and does not consider this as a major problem that needs tackling. Hence, various forms of awareness-building campaigns and education are necessary to change this social thinking. Governments and universities should take action to address these concerns.

Proactive engagement from students is essential in reducing the chances of discrimination, which may also need some form of cross-cultural training to reduce the influence of monoculturalism among students, especially among those who have not witnessed or experienced another culture. Therefore, cross-cultural training should become part of the curriculum in universities.

6. Conclusion

The article examined the issue of discrimination, as a major problem faced by international students or migrant students in Canada. As a major international educational

destination, Canada is attracting millions of students every year. However, current conditions reported by academic articles and other sources claim that concerns about discrimination have not improved in the country. Students continue to experience such issues, despite universities and national/state governments promoting various policies and regulations. Consequences of such discrimination and related experiences were also identified in the context of Canada. Considering current numbers and statistics within this context, the article identified significant improvements are needed in this direction, as more improvements are needed to reduce the number of such discrimination events or even limit the chances of international students experiencing discrimination issues in the wider society, outside of their educational institutions, such as the local communities, or their workplaces.

References

1. Abadi, M. (2019, December 21). Canadians' views on racism unchanged, despite "difficult" conversations in 2019: poll. Global News. https://globalnews.ca/news/6321879/canada-racism-blackface-don-cherry/
2. Angus Reid Institute. (2021, October 19). Diversity and Education: Half of Canadian kids witness ethnic, and racial bullying at their school. Angus Reid Institute. https://angusreid.org/canada-school-kids-racism-diversity/
3. Canada, S. (2024). Changing Systems, Transforming Lives: Canada's Anti-Racism Strategy 2024-2028 - Canada.ca. Canada.ca. https://www.canada.ca/en/canadian-heritage/services/combatting-racism-discrimination/canada-anti-racism-strategy.html#a9
4. Cukier, W., Adamu, P., Wall-Andrews, C., & Elmi, M. (2021). Racialized leaders leading Canadian universities. Educational Management Administration & Leadership, 49(4), 174114322110013. https://doi.org/10.1177/17411432211001363
5. Fibbi, R., Midtbøen, A. H., & Simon, P. (2021). Concepts of Discrimination. IMISCOE Research Series, 13–20. https://doi.org/10.1007/978-3-030-67281-2_2
6. Firat, M., & Noels, K. A. (2021). Perceived discrimination and psychological distress among immigrants to Canada: The mediating role of bicultural identity orientations. Group Processes & Intergroup Relations, 25(4), 136843022199008. https://doi.org/10.1177/1368430221990082
7. Government of Canada. (2024, May 16). The Daily — Half of racialized people have experienced discrimination or unfair treatment in the past five years.

Www150.Statcan.gc.ca. https://www150.statcan.gc.ca/n1/daily-quotidien/240516/dq240516b-eng.htm

8. Hussain, M. M. (2022). The policy efforts to address racism and discrimination in higher education institutions: The case of Canada. Center for Educational Policy Studies Journal, 13(2). https://doi.org/10.26529/cepsj.965

9. International Service for Human Rights. (2024, March 25). Canada must address systemic racism affecting people of African descent. ISHR. https://ishr.ch/latest-updates/canada-address-systemic-racism-affecting-people-of-african-descent-and-recognise-them-as-a-distinct-group-in-the-constitution/

10. Isai, V. (2024, January 6). Canada's Foreign Student Surge Prompts Changes, and Anxiety. The New York Times. https://www.nytimes.com/2024/01/06/world/canada/canada-immigration-international-students.html

11. Law Document English View. (2014, July 24). Ontario.ca. https://www.ontario.ca/laws/statute/17a15

12. Le, N. P., & Sarwar, A. (2024). Challenges and Strategies for the Adaptation of International Students to the Canadian Workplace. Open Journal of Social Sciences, 12(8), 318–329.

13. McDonald, J., & Ward, L. (2017, March 21). Why so many Canadian universities know so little about their own racial diversity. CBC. https://www.cbc.ca/news/canada/race-canadian-universities-1.4030537

14. Menezes, A., Henry, S., & Agarwal, G. (2022). It's high time Canada started collecting race-based performance data on medical training and careers. The Lancet Regional Health - Americas, 14, 100326. https://doi.org/10.1016/j.lana.2022.100326

15. Metzner, F., Adedeji, A., Wichmann, M. L.-Y. ., Zaheer, Z., Schneider, L., Schlachzig, L., Richters, J., Heumann, S., & Mays, D. (2022). Experiences of Discrimination and Everyday Racism Among Children and Adolescents With an Immigrant Background – Results of a Systematic Literature Review on the Impact of Discrimination on the Developmental Outcomes of Minors Worldwide. Frontiers in Psychology, 13(805941). https://doi.org/10.3389/fpsyg.2022.805941

16. Saunders, N. R., Guan, J., Macpherson, A., Lu, H., & Guttmann, A. (2020). Association of Immigrant and Refugee Status With Risk Factors for Exposure to Violent Assault Among Youths and Young Adults in Canada. JAMA Network Open, 3(3), e200375. https://doi.org/10.1001/jamanetworkopen.2020.0375

17. Tavares, V. (2021). Feeling excluded: international students experience equity, diversity and inclusion. International Journal of Inclusive Education, 28(8), 1–18. https://doi.org/10.1080/13603116.2021.2008536

18. TOI Education. (2025, January 23). International students base in Canada: A comparative analysis over the years. The Times of India; Times Of India. https://timesofindia.indiatimes.com/education/news/international-students-base-in-canada-a-comparative-analysis-over-the-years/articleshow/117492118.cms

19. Worae, J., & Edgerton, J. D. (2023). A Descriptive Survey Study of International Students' Experiences at a Canadian University: Challenges, Supports and Suggested Improvements. Comparative and International Education, 51(2). https://doi.org/10.5206/cie-eci.v51i2.14223.

Job Satisfaction and Employees Engagement - A Study among Employees in Indian Railways with Special Reference to Thiruvananthapuram Station

Discipline: Commerce

Shamna H.

Assistant Professor, Department of Commerce, MSM College, Kayamkulam,
Email: shamnashihar@gmail.com

Received: 26.09.2024 | Revised Submission: 26.03.2025 | Accepted: 28.04.2025 | Available Online: 30.04.2025

Abstract

The intention of this study is to assess the satisfaction of employees in Indian Railways by analyzing multiple factors which affect their satisfaction levels. A representative sample was drawn from the 120 Group D staffwhobelong to the technical wing at Thiruvananthapuram Station. Out of the 150 questionnaires administered, 120 were filled and returned for analysis. Work contentment in relation to age and gender was analyzed using the Chi-Square statistical test. In the modern world, the extent of employee participation and the quality of work executed within an institution are instrumental to its growth and advancement. Any organization aiming for success should ensure that employee satisfaction is achieved at the highest possible level to drive development and growth within the institution.

Keywords: *Job satisfaction, Factors, Indian Railways, nature of work, work environment, job security.*

Introduction

Indian Railways, comes under the independent body of Ministry of Railways in Government of India, is crucial for the nation's development and in 2024, ranked 4th in the world by size of railway network among nations. A significant challenge in a developing country like India is the widespread problem of unemployment. Indian Railways, serves as the country's primary employer, assumes a lot of this responsibility alleviating however, not solving the issue. Even after contributing so much, railway workers face multiple problems like safety issues, poor management, lack of communication, and the need for modern technology or innovation all while having to deal with legal constraints. Impact from work means more than receiving a paycheck; satisfaction at work defines the amount of contentment and joy an employee has from the work performed and can be evaluated behaviorally, cognitively, and emotionally.

Job satisfaction is conventionally classified into two discrete categories: intrinsic and extrinsic; the former accounts for the impliedattributes of the job itself, encompassing the particular duties and responsibilities undertaken, whereas the latter is shaped by exterioraspects such as the organizational environment, compensation, managerial practices, and interpersonal relationships within the workplace. Increased levels of job satisfaction produce favorable outcomes for both employees and employers, as this complex construct encompasses a plethora of emotional states and situational contexts (Muhammad Jahanzeb Khan, 2021). Empirical studies have consistently indicated that employees who report elevated levels of satisfaction are more likely to engage in optimal performance in the realization of organizational goals.Individuals who derive considerable gratification from their occupational engagements demonstrate improved punctuality, productivity, and dedication, which collectively contribute to an elevated sense of overall life satisfaction. For the purpose of increasing the level of job satisfaction and augment the performance indicators, organizations should establish adequate systems for career advancement, which may includebetter compensation, active participation in decision-making processes, and schemes designed to reinforce organizational commitment. Furthermore, the ensuring of job security, along with strong relationships with other people, is key in nurturing a conducive environment of job satisfaction.

There are a lot of factors that influence a person's loyalty to anenterprise including the nature of work supervision style,degree of job security, the recognition of contributions and the opportunities for career growth, retirement plans, profit-sharing schemesall greatly improves overall job satisfaction These factors are considered as critical component of job satisfaction.Job satisfaction is a vitalelement that firmscontinuouslymeasure because it has a substantialrole on employee performance and retention rates. Dual-factor theory of Frederick Herzberg bifurcates theelements of job satisfaction into two types: motivators and hygiene factors. This division helps to explain clearly the intricacies of job satisfaction. Even though they play a significant role in minimizing dissatisfaction, hygiene factors—which include compensation, interpersonal workplace dynamics, hierarchical status and job security—do not directly accelerate job satisfaction. Instead, job satisfaction is significantly enhanced by motivators like achieving goals, recognition, job responsibilities, opportunities for career growth and personal development. Low motivation, low morale,high amount of stress, high rate of absenteeism and high employee attrition rates are the major outcomes oflow-level job satisfaction.

Literature Review

- In the study conducted by Wasaf Inayat and Muhammad Jahanzeb Khan,"A Study of Job Satisfaction and Its Effect on the Performance of Employees Working

in Private Sector Organizations Peshawar" (2021) a strong relationship between occupational roles and job satisfaction constructs was identified. The findings of this studyvalidated a connection between job satisfaction and the performance of employees, thusclarifying that contented workersgivehigh productivity and provideconsiderable contributions to the development of their organizations. In view of the predominant economic and political chaos in Peshawar, the study emphasized the essentiality of nurturing employee motivation and satisfaction as a means to enhance overall performance.

- Ramesh Vaddi and Kumar Ashok (2023) examinedin detail the sphere of job satisfaction within the Guntakal Railway Division. The findings explained that the employees show a strong sense of contentment regarding the highefficiency of the corporation, tied with ahighlevel of trust in its leadership, thoughsimultaneously, a considerablenumber of employeesexpressedspirits of being valued and recognized for their contributions.
- The study conducted by Ashok Kumar and Bala Nageswara Rao (2015) revealed that the Indian Railways presides over awide-rangingmanpower network, wherein a substantialportion of its operational expenditures is kept for employee compensation and supplementarystaff costs, thusunderlining the significantfinancialcommitmentrequired to support such a massiveworkforce.
- Naved Ahmad and colleagues (2014) examined the complex relationship between organizational commitment and performance of workers, with a specificprominence on the outcomesof employee welfare; the results explained a strong correlation between employee satisfaction and organizational commitment, thuspostulating that employees who are satisfied as wells as actively involved are inclined to show betterefficiency in their areas of work.

Statement of the Problem

Indian Railway is the largest employer in the country thatutilizesa lot of money on human capital accounting for the major share of its operational expenses. The development and maintenance of organizational behavior and the improvement of job satisfaction present this institution with a significant challenge. It is imperative for any organization to foster commitment and mitigate employee attrition. Additionally, by reducing unemployment and creating a large number of job opportunities Indian Railways greatly aid in the nation's economic development. A complex and multidimensional concept job satisfaction encompasses a range of feelings and viewpoints that differ from one employee to the next depending on their individual experiences and backgrounds. Understanding the subtleties of job satisfaction and how it affects employee

performance has become crucial in the context of an increasingly competitive workplace. The work environment safety and security peer and superior relationships management policies job duties and the sufficiency of necessary infrastructure are just a few of the many elements that together impact an employee's level of satisfaction and overall productivity within the company.

Objectives of the Study

1. To identify the major aspects of Indian Railway employees' jobs that make them feel satisfied.
2. To study how gender and job satisfaction are related.
3. To examine the relation between employees age and job satisfaction.

Scope of the Study

The extent of this study is confined to the job satisfaction and engagement of the Thiruvananthapuram Railway Station employees. This study primarily focuses on clarifying the various elements that affect job satisfaction the relationship between age and job satisfaction and the interaction between gender and satisfaction levels. Railway management policymakers and human resources departments stand to benefit greatly from the knowledge gained from this research project as they work to improve working conditions and create strategies for retaining employees.

Methodology

Th study focuses on examining the complex relationship between age and job satisfaction the gender gap and its relationship to job satisfaction and the critical factors that influence employee satisfaction. A carefully planned questionnaire was created and distributed to the participants in order to achieve these goals. To determine satisfaction levels across a range of factors a quintuple-point Likert scale was used. Responses were classified as follows: 1 = Profoundly Dissatisfied 2 = Dissatisfied 3 = Indifferent 4 = Content and 5 = Profoundly Satisfied. Data was collected from a sample of 120 Group D railway employees in Thiruvananthapuram using the convenience sampling technique. The Chi-Square statistical test was employed to evaluate the relationship between age gender and job satisfaction metrics and to clarify the effects of different factors on job satisfaction.

Testing of Hypothesis

Null Hypothesis (H€): There is no substantialvariation in the perceived influence of various factors on job satisfaction. Alternative Hypothesis (H): There is a substantialvariancein the perceived influence of various factors on job satisfaction.

Table1. Factors influencing job satisfaction

Sl No:	Factors	HD	%	D	%	N	%	S	&	HS	%	Chi Square Value
1.	Natureofthe Work	8	6.67	35	29	2	1.67	62	51.67	13	10.83	367.47
2.	Achievement and Recognition	19	15.83	60	50	20	16.67	12	10	9	7.5	
3.	Personal Growth & Development	28	23.33	41	34.17	14	11.67	29	24.17	8	6.67	
4.	Autonomy and Responsibility	15	12.5	39	32.5	6	5	34	28.33	26	21.67	
5.	Work- Life Balance	29	24.17	37	30.83	12	10	19	15.83	23	19.17	
6.	Compensation And Benefits	12	10	8	6.67	9	7.5	52	43.33	39	32.5	
7.	Work Environment	39	32.5	28	23.33	13	10.83	27	22.5	13	10.83	
8.	Job Security	32	26.67	34	28.33	8	6.67	20	16.67	26	21.67	
9.	Supervision and Leadership	44	36.67	48	40	5	4.17	11	9.17	12	10	
10.	Company Policies and Administration	10	8.33	14	11.67	9	7.5	45	37.5	42	35	
11.	Workload and Stress Levels	32	26.67	44	36.67	6	5	18	15	20	16.67	
12.	Work Relationships	8	6.67	11	9.17	5	4.17	56	46.67	40	33.33	

For df = 44 at 5% level of significance, the critical value is approximately 66.8.
(Degree of Freedom-(c-1) (r-1) = (5-1) (12-1) = 44

Decision

The calculated Chi-Square statistic is 367.47,which islargerthanthetablevalue 66.8. So, the null hypothesis (There is no significant difference in the perceived influence of various factors on job satisfaction) is rejected and accept the alternative hypothesis (There is a significantdifferenceintheperceivedinfluence of various factors on job satisfaction.)

Table2. Demographic profile of the respondents (N=120)

Sl. No.	Profile	Frequency	%
1.	Gender Male Female	 70 50	 58 42
2.	Maritalstatus Married Unmarried Widowed Divorced	 75 28 8 9	 63 23 7 8
3.	Age 25-35 36-45 46-55 56-above	 27 52 35 6	 23 43 29 5
4.	Education Secondary(10th)	 16	 13
5.	Seniorsecondary (12th) Graduation PostGraduation	34 48 12	 40 10
6.	Salarypermonth (Rs.) upto45,000 45,001-50,000 Above50,000	 24 56 40	 20 47 33

Hypothesis -1 for Gender:

Table 3: Contingency table for Gender profile of the respondents (N=120)

Sl. No.	Factors effecting job satisfaction	1 HD	2 D	3 N	4 S	5 HS	Row Total	Chi Square Value
1	Gender Male Female	2 9	4 6	5 10	18 11	41 14	70 50	18.65
	Column Total	11	10	15	29	55	N=120	

Degree of freedom=(R-1)(C-1)=(2-1)(5-1)=1x4=4 ÷^{2} calculated value = 18.65

TableValue=9.488at5% level of significance.

Decision

Calculated value (18.65) is greater thantable value (9.488).So, null hypothesisis rejected i.e., There is no relationship between gender of the respondents and job satisfaction and accept the alternative hypothesis. So, it is concluded that gender has influenced the job satisfaction.

Hypothesis 2: Age and Satisfaction Level

Table4. Contingency Table for Age of the Respondents (N=120)

Sl. No.	Factors effecting job satisfaction	1 HD	2 D	3 N	4 S	5 HS	Row Total	Chi Square Value
3	Age25-35	2	4	2	7	12	27	
	36-45	8	5	20	7	12	52	
	46-55	4	5	5	10	11	35	18.64
	56-above	1	2	1	1	1	6	
	Column Total	15	16	28	25	36	N= 120	

Degree of freedom = (R-1) (C-1) = (4-1) (5-1) = 3x4 =12 ÷^{2} calculated value = 18.64

Tabulated value = 21.026 (At 5% level of significance)

Decision

Here the calculated chisquare value is18.64 is less than table value 21.026

Since the calculated Chi-square statistic was18.64,which is less than this critical value, this confirms that we fail to reject the null hypothesis, indicating no significant association between age and job satisfaction at the 5% level.

Results and Discussion

- **Factors affecting Job Satisfaction**

This study focuses on the factors affecting job satisfaction among employees in Indian Railways. The following are the main descriptive findings for every factor.

The majority of workers are not happy in their positions. They are happy with the aspects of job satisfaction that are related to the nature of the work the work relationship the pay and benefits and the administration and policy of the company. Majority are dissatisfied with Supervision and Leadership.

- **Relationship between job satisfaction and gender**

When examining the level of satisfaction by gender it can be said that male employees are happier than female employees. Additionally, a strong correlation between job satisfaction and gender has been observed.

- **Relationship between job satisfaction and the age of employees**

Regarding the employees ages. Among the age category of 25-35 have highly satisfied with their job and the age category of 36-45 are dissatisfied with their job. Additionally, it is determined that age and job satisfaction do not significantly correlate.

Conclusion

One of the biggest challenges facing Indian Railways is the need to foster positive organizational behavior while also raising employee job satisfaction. All organizations want to reduce attrition rates while strengthening employee loyalty. The goal of this study was to clarify the various elements that affect job satisfaction in the railroad industry. The findings demonstrate that the majority of workers are satisfied with their jobs especially with regard to the intrinsic nature of their work and the compensation and benefits they receive. Additionally, the study finds a significant relationship between gender and job satisfaction but no significant relationship between age and job satisfaction measures was found. Interestingly compared to workers in other age groups those in the 25–35 age range expressed higher levels of job satisfaction. Despite these discoveries the analysis suggests that many factors influencing job satisfaction continue to be major issues for employees. Indian Railways must therefore take proactive steps to increase employee satisfaction. Enhancing employee morale and putting effective motivational techniques into practice will be essential to raising overall job satisfaction in the company.

References

1. Panigrahi Ashok and Joshi D, Vijay (2016). Study of Job Satisfaction and Its Implications for Motivating Employees at Infosys. Retrieved from https://www.researchgate.net/publication/323414158_Study_of_Job_Satisfaction_and_Its_Implications_for_Motivating_Employees_at_Infosys.
2. JobSatisfactionSurvey, Volume 3, Edition5,AbsoluteAdvantage, Publishedby WELCO (Wellness Council ofAmerica).
3. WasafInayat,MuhammadJahanzebKhan,2021.AStudyofJob SatisfactionandItsEffectonthePerformanceofEmployeesWorkingin Private Sector Organizations, Peshawar. Retrieved from https://onlinelibrary.wiley.com/doi/10.1155/2021/1751495
4. Ashok Kumar Katta ,Vaddi Ramesh.2023. Employee Job Satisfaction in IndianRailways:AMeanAnalysisofOrganizationalFactorswithReferenceto Transportation and Commercial Department Employees-Guntakal Railway Station, South Central Railway Zone.Retrieved from https://www.researchgate.net/publication/366904903_Employee_Job_Satisfaction_in_Indian_Railways_A_Mean_Analysis_of_Organizational_Factors_With_Reference_to_Transportation_and_Commercial_Department_Employees-Guntakal_Railway_Station_South_Central_Railway
5. Ashok Kumar and Bala Nageswara Rao, "Performance of Indian railways towards employees job satisfaction with reference to Vijayawada division", International Journal of Current Research, February, 2015, Volume.7, Issue.02, pp.12980-12982.
6. Naveed Ahmed, Nadeem Iqbal, Komal Javed and Naqvi Hamad, (2014) "Impact of Organizational Commitment and Employee Performance on Employee Satisfaction", International Journal of Learning, Teaching, and Educational Research", Volume.1, No.1, pp.84-92.
7. Kapur Radhika, 2018.Factors Influencing Job Satisfaction. Retrieved from https://www.researchgate.net/publication/323700853_Factors_Influencing_Job_Satisfaction
8. Yasin YM, Kerr MS, Wong CA, Bélanger CH. Factors affecting nurses' job satisfaction in rural and urban acute care settings: A PRISMA systematic review. J Adv Nurs. 2020; 76: 963–979. https://doi.org/10.1111/jan.14293

9. Job Satisfaction, https://www.hrhelpboard.com/performance-management/job-satisfaction.html

10. Nlizwa Rashid, Samer Ali & Adina Nawi, An empirical evidence of job satisfaction among employees at sharia compliance hotel, Religacion, Vol. 4 No.17, July 2019, pp. 166-179, https://1library.co/document/yr297voz-empirical-evidence-job-satisfaction-employees-sharia-compliance-hotel.html

11. Wasaf Inayat, Muhammad Jahanzeb Khan, 2021. A Study of Job Satisfaction and Its Effect on the Performance of Employees Working in Private Sector Organizations, Peshawar. Retrieved from https://onlinelibrary.wiley.com/doi/10.1155/2021/1751495

12. https://en.wikipedia.org/wiki/Indian_Railways

Awarenesson Cyber Crimesamong College Students with Special Reference to Arts & Science Colleges in Alappuzha District of Kerala, India

Discipline: Cyber Law and Security

Promod Gopal
Assistant Professor, Department of Commerce, NSS College Pandalam, Kerala, India
Email: promodgopal1@gmail.com

Neeraj S.
Milad -E-Sherief Memorial College, Kayamkulam, Kerala, India
Email: neerajs7592@gmail.com

Received: 26.09.2024 | Revised Submission: 27.04.2025 | Accepted: 05.05.2025 | Available Online: 07.05.2025

Abstract

This paper aims to examine the level of awareness regarding cybercrimes among college students. As the utilization of cyber space rises, so does the occurrence of cybercrimes. Therefore, the purpose of this study is to examine the level of awareness of various cybercrimes among college students, analyze their reactions to cybercrimes they have encountered, and evaluate the safety measures they have implemented to protect themselves from cybercrimes. The results of the study showed that several students do not have a clear idea about cybercrimes like trojan horse and web jacking, and there are students who are not following legal measures to fight against cybercrimes. It is highly essential to increase awareness about cybercrimes among college students.

Keywords: Cybercrimes, cyber space, awareness

Introduction

India is one of the largest countries in the world in the context of internet usage. Internet is the widely used medium for teaching and learning. Increase in the use of internet by way ofsmart phones, tablets, computers and other devices in day-to-day lives has led to an increase in cybercrimes. Students use the internet to access social networking sites and post videos, online banking, book tickets etc. which saves energy and time. In some situations, students are exposed to cybercrimes while doing virtualtransactions or visiting social mediaplatforms. Cybercrimes occur due to lack of knowledge about cybercrimes and cyber laws. Therefore, it is now necessary to understand cybercrime in order to protect current and future generations. Governmenthas to develop effective strategies to educate students to avoid cybercrimes.

Statement of the Problem

The primary objective of university education is to equip students with the necessary skills and knowledge for their future endeavours. As students nurture their talents and skills, they contribute to the growth and development of the nation. At present, students highly depend on the internet to increase their knowledge and advance their skills. Thus, internet has become a vitalaspect of the day-to-day life of students. The increase in the usage of internet will result in the occurrenceof various types of cyber criminals. This is a growing concern in the virtual world as people are becoming highly connected to the internet. The incidence of cybercrimes is rising rapidly, and more and more people are vulnerable to its risks. It is necessary to conduct detailed investigations into the issues of cybercrime because there has been a considerable increase in cases of identity theft, online fraud, malware, and hacker attacks. As technology is advancing faster, students should be offered with safe and securefree from cybercrimes. All colleges are required to raise awareness about cybercrimes. The purpose of this study is to give an insight on the level of awareness among college students regarding cybercrimes.

Relevance of the Study

The research on understanding and recognizing cybercrimes and cyber laws is of great importance in our current society. Students are the primary users of information obtained from the internet. Consequently, it's crucial for students to gain knowledge about cyber threats and the potential repercussions they can have. This research holds significant importance in incorporating cyber awareness programs into the daily curriculum of all universities and branches of education.

Objectives

1. To access the level of awareness on different types of cybercrimes among college students.
2. To understand the different types of cybercrimes encountered by college students.
3. Analyse college student's response to cybercrimes in cyber space.
4. To access the influence of gender on choice of safety measures against cybercrimes.
5. To understand the safety measures adopted by college students against cybercrimes

Methodology

The present study is descriptive in nature and the data was collected from 100 students randomly selected from the arts and science colleges in Alappuzha district,

Kerala, India. The primary data were collected through service and systematically collected google forms. Convenient sampling method is used to collect data. The study period was between September and October 2024.

Review of Literature

- **Vinaya Chaturvedi (2018)** conducted a study on the impact of cybercrime technology on digital banking in India. The objective of this study is to examine the level of awareness among individuals regarding the utilization of internet banking as a means of accessing bank accounts and obtaining necessary information conveniently. The study also analysedthe reasons why some customers do not prefer electronic banking. It further aims to understand different cybercrimes related to digital banking operations. The survey results indicate that individuals in the age group of 30 to 40 are not choosing digital banking because they lack awareness about its benefits. The individuals who engage in digital banking are well-informed about cybercrimes and they are actively implementing various preventive measures to safeguard themselves from cybercrimes while utilizing the internet, thereby minimizing the risk of falling victim to cybercrime.
- **Shikha Panwar (2018)** conducted a study on cyber security awareness and challenges in India, as information security is crucial in today's internet-driven world. The primary objective of the research is to understand the significance of information security for organizations, institutions, and companies, and to investigate the reasons behind its necessity. Additionally, the study aims to explore how individuals and other internet users can safeguard their information. They examined the different forms of cybercrimes and how they impact organizations, as well as the challenges faced by these organizations. They concluded that raising awareness about cyber security is crucial for organizations to minimize cybercrime in the future. They should ensure the safety of their organizational data by utilizing the most advanced security measures available. The organizations are aware of the importance of information security, but the employees who utilize it are not particularly concerned about it, so the organizations should make an effort to educate the users about its significance.

Cyber Crime

Cybercrime poses a significant problem to both companies as well as individuals, making it a dangerous attack that must be addressed seriously. There are multitudinous cases where thebe-attack has redounded in significant fiscal loss for both the company and individualities due to the data breach. In moment's technology- driven world,

computers have come the primary source for penetrating and participating information. Cybercrime refers to a crime committed against computers and other digital bias. Teessider-attacks can pose a significant trouble not only to the association but also to the entire nation. To this day, there have been multitudinous cases of digital attacks in India and worldwide, egging the need for enhanced security measures. These attacks are also impacting the frugality of the country if not addressed in the early stages. Cybercrime encompasses a range of offenses committed online, exercising the internet via computers, laptops, tablets, internet- enabled boxes, and smartphones. Acts that are against the law and involve computers can either be used as a tool or a target, leading to cybercrime. It is also appertained to as electronic crimes-crime, high technology crime, information age crime etc. These types of crimes involve illegal conditioning that use computers and networks. As the internet has advanced, the number of cybercrime conditioning has also grown.

Preventive Measures

- **Maintain your applications up to date: -**This is an essential requirement for anycomputer system and application. It is crucial to regularly update your operating system, services, and applications to ensure that you have the most recent bug fixesand security patches. This also applies to smartphones, tablets, local computers, notebooks, online services, and all the applications they run internally.
- **Enable the network firewall: -**The majority of operating systems come with a pre-configured firewall that safeguards against harmful packets originating from both internal and external sources. A system firewall serves as the initial digital barrier whenever an individual attempts to transmit a malicious packet to any accessible ports.
- **Create unique and complex passwords: -**Avoid using the same password for multiple websites, and ensure that it includes a combination of letters, special characters, and numbers. Create robust passwords for every website and simultaneously store them in an encrypted database.
- **Install and update antivirus and anti-malware software: -**This is a highly effective measure for both individuals using desktops and corporate users. It is always advisable to ensure that antivirus and antimalware software are regularly updated and perform scans on local storage data. Although free antivirus and antimalware solutions can be beneficial, they are typically trial software and do not provide comprehensive protection against the majority of common virus malware and other network threats.

- **Enable the email spam filtering option: -**Unsolicited emails often serve as a breeding ground for computer hacking, as they frequently contain malicious links or attachments. To activate the anti-spam function in your email client, ensure that it is enabled. Additionally, it is crucial to refrain from opening links or attachments from unknown senders. This will help protect against phishing attempts and prevent the installation of harmful software.
- **Enforce two-step verification for all online services: -**In today's digital landscape, many online services and products provide an additional layer of security through two-factor authentication. These security measures provide an additional layer of authentication, ensuring that even if an attacker manages to obtain the username and password, they will still be unable to gain access. The hackers will be unable to access online accounts because they do not possess the two-factor authentication generated or created by computers.
- **Secure the local hard disk: -**Digital crime doesn't only happen online – imagine someone breaking into a house and stealing a notebook, so it is crucial to safeguard data on the hard drive. In the event that criminals attempt to access the drive's content, they will be unable to determine the correct key to unlock it.
- **Only purchase from reputable and trustworthy online retailers: -** All SSL-certified websites are actually secure. To safeguard yourself from becoming a target of theft or fraud, make sure that the website you are using is secure with https encryption and only shop on reputable online platforms like Amazon, eBay, or Walmart.
- **Make use of VPN services: -** The operation of VPN services is on the rise annually, and it's completely normal to use one to help third- party companies from covering online exertion. One of the reasons to use a VPN is to pierce a secured network from a remote position.
- **Secure the e-mail: -**By utilizing a reliable privacy key, one can guarantee that their email is only accessible to the intended recipient. Pgp is a tool that helps to sign, encrypt, and decrypt various forms of digital communication, such as texts, emails, and files, thereby enhancing the security of your online correspondence.
- **Track the children's internet use: -** Occasionally, local network breaches do not originate from an individual's personal computer, but rather from children's tablets, phones, or notebooks. Teach children about online safety and take measures to protect them from falling prey to cyber criminals.

Discussion and Interpretation

Findings

1. Majority of the students are only slightly aware about trojan horse and web jacking.
2. Majority of the students are aware about cyber crimes through academic learnings and newspapers.
3. A majority of the students encountered online fraud, which is currently the most prevalent cyber crime in the present world.
4. Only a small portion of respondents react to the cyber crime by informing police.
5. Majority of students use passwords as safety measures against cyber crimes.
6. Only a few students use VPN as a safety measure against cyber crimes.

Conclusion

Scholars must have a good understanding of cyberspace as it's a pivotal source of information for their academic hobbies. still, the way pupil communities use cyberspace poses a significant challenge for parents and educational institutions, as cyberspace access has come more accessible and affordable than ever ahead. In India, the proportion of cybercrimes is adding, as there's a lack of mindfulness about these crimes and how to combat them through cyber law. The maturity of the repliers has concurred that online fraud is the primary issue they encountered while exercising the internet. utmost of the scholars is familiar with cybercrime through their academic studies and reading journals. It's apparent that a significant number of repliers are still lacking mindfulness regarding certain cybercrimes. Some individualities are ignorant of the necessary preventives to guard their information in moment's world, where identity theft has come a current crime. thus, it's pivotal for them to take applicable measures to cover their data. They should take advantage of the benefits of using a VPN to enhance their protection against cybercrimes. A significant number of the actors are not taking advantage of the advantages offered by a virtual private network (VPN). multitudinous scholars are impacted by cybercrimes, yet they are not prepared to report these incidents to law enforcement. This has to be altered. It's pivotal to address all the issues in cyberspace through legal means. numerous individualities calculate on watchwords as a security measure, but they ensure that they don't use the same word for multiple websites. Also insure the regular changing of watchwords. The act of downloading pictures, games, and other digital content is considered a form of cybercrime. To avoid falling victim to cybercrime, it's pivotal to apply preventative measures and preventives while navigating the online world, in order to help unborn incident.

References

1. Vinaya Chaturvedi (2018) Cybercrime Technological Blight in Digital banking in India. Journal of Business and Management. pp 55-62
2. Shikha Panwar (2018) Cyber security Awareness challenges in India. International Research Journal of Engineering and technology. Vol.5 issue - 1, pp 1258 - 1259.

An Empirical Study on Exploring Motivational Factors Behind Organic Cosmetic and Personal Care Product Consumerism in India

Discipline: Commerce

Mrs. Tracy George Bertle
ResearchScholar in Commerce, Government College Attingal, Thiruvananthapuram, Kerala, India, University of Kerala, India
Email: tracybertle92@gmail.com

Dr. Ansi Rahila
Head of the Department of Commerce, St. Xavier's College
Thumba, Thiruvananthapuram, Kerala, India, University of Kerala, India
Email: dransisxc@gmail.com

Received: 02.04.2025 | Revised Submission: 05.05.2025 | Accepted: 12.05.2025 | Available Online: 19.05.2025

Abstract

The Indian beauty industry has undergone remarkable growth and change in recent years, becoming one of the most vibrant sectors in the country's economy. Itblends traditional practices with local brands and global giants, creating a dynamic landscape where innovation and diversity thrive. Organic products anditsrelevance were increasing gradually. People are very much acquainted with the products that they were using especially on their bodies. So the organic cosmetic products have made an influential impact among the consumers.The study spotlights on the driven forces behind the purchase of organic products from the part of consumers. The usageof Organiccosmetic products aremoreamongthe female consumers as they are more towards cosmetic products in general. The study tries to analyse why consumers showed favouritism towards Organic cosmetic andwellness products in the past ten years. In recent times, there is a huge paradox shift of consumers to organic products in total and organic cosmetic and wellness products are no longer excluded from that. The study focuses on the radical change of consumers from conventional or natural cosmetic products to organic ones. People are now more vigilant about their intake in terms of their skin and hair. Additionally, the article highlights the foundation for distinguishing sustainable cosmetic products from traditional cosmetics and wellness items for consumers. The purpose of this paper is to develop this framework.

Keywords: Sustainable,OrganicCosmetic,BuyingBehaviour, Personal Care Products

Introduction

India's skincare market has rapidly transformed to cater to the varied preferences and demands of its consumers. Despite the pandemic's disruptions, the market has continued to grow significantly and holds a promising future. Changes in lifestyles and greater awareness have been key factors in the progress of India's cosmetic industry. India came in fourth in 2023 among world markets by income for personal care and beauty. Local brands have become more well- known, even while multinational brands like Unilever, Procter & Gamble , and L'Oreal still control the international market. Due to these foreign brands incapacity to adequately cater to Indian skin types, local businesses such as Mama Earth, Khadi Essentials, Plum and Soul Tree have been able to thrive with their line of handmade cosmetics and personal care products.

OrganicProducts

Ingredients from organic farming are used to make organic products.The most popular products are organic foods,but organic farming methods can also be used to make apparel and personal hygiene products.These products only use natural farming practices and devoid of artificial chemicals and genetically modified ingredients.To protect consumers,several nations have strict laws, and authorities frequently certify goods as organic.Utilising only permitted ingredients,preserving bio diversity, and safe guarding natural resources are the main goals of organic farming

OrganicCosmeticand PersonalCare Products

Organic cosmetics meet the highest international certificate criteria and are composed of atleast 95% certified organic components.These goods are made from components that are grown without the use of dangerous chemicals which are bad for the environment and human health like pesticides,herbicides and artificial additives.Organic beauty products are environmentally beneficial because they does not contain pesticides genetically modified materials,artificial colouring or scents.By giving birds,insects and other species a place to live, organic farms also promote bio diversity and wild life.

Organic cosmetics are typically more costly than conventional ones,but they are manufactured with better components and less likely to irritate skin or trigger allergic responses.Incontrast,conventionalcosmeticsareoftencheaper butmaybeharsheron both theskin and theenvironment. Organicingredientsare strictly non-GMO and grown without synthetic fertilizers or pesticides. Typically, organicproductscontain95-100%chemical-freeingredients,whilenaturalproducts usually range between 50-70%.

Objectives

- To understand how consumers can distinguish between Organic Cosmeticand Personal Care Products products and natural cosmetic products.
- To explore the key factors influencing consumers' decisions to purchase Organic Cosmetic Products and Personal Care Products.
- To study the way consumer demand for Organic Cosmetic and Personal Care Products has developed over the last decade.

Research Methodology

This study employs an empirical research approach, relying on secondary data and focusing on a review of various published research articles from different journals related to organic cosmetics and personal care products. There is a limited amount of research available on organic personal care products. To better understand this gap, it is necessary to organize and categorize the existing studies. This paper seeks to establish a framework to support that effort. All the articles used were published between 2014 and 2024 and include studies conducted nationwide.

What is the distinction between Organic cosmetic Products and Natural Products ?

Certified natural cosmetics are made from raw materials, aligned with natural processes, andare cruelty-free.These products must not include:

Paraffin

Silicones

Petroleum-based synthetic dyes

Parabens

Organic cosmetics, on the other hand, consist of plant-based ingredients that are cultivated without synthetic chemicals or GMOs. To be classified as organic, a cosmetic must contain at least 95% organic ingredients, without any petroleum-derivedcompounds,paraffin,formaldehyde,orsyntheticdyes.Furthermore,organic cosmetics are eco-friendly in both their formulation and packaging, which is recyclable and biodegradable.

Opting for an organic private labelcosmetic helps protect your skin from premature aging caused by harmful chemicals present in non-organic alternatives. These products are not only safe but also effective, promoting beauty while maintaining skin health.

How to Recognize "Natural" or "Organic" Cosmetics

Although many cosmetic products advertise themselves as "natural" or "organic," these claims aren't always backed by verifiable evidence. Consumers can try to evaluate these claims by examining the on-pack ingredient list (INCI), but since manufacturers are not legally required to disclose the source of ingredients (whether natural, synthetic, or petrochemical), this method has its limits. So, how can consumers be confident that a product truly aligns with natural or organic standards? Independent certifications like the NATRUE Label provide that assurance. This label allows consumers to easily identify products that meet stringent, transparent criteria related to formulation, ingredients, and production methods. Under the NATRUE certification, the terms "natural" and "organic" are clearly defined and guaranteed at different levels—ranging from natural cosmetics to organic cosmetics with a higher organic content.

Organic skincare products are made from plant-based raw materials sourced from organic farming. They are always accompanied by valid certification to ensure their safety.

Herearesomeofthemostrecognizedcertificationbodiesfororganiccosmetics:

- Ecocert Greenlife Standards

  A minimum of 95% of the ingredients must be of natural origin or naturally derived.

  At least 95% of the plant-based components must be sourced from organic agriculture.

  A minimum of 10% of the entire product, including water, must be organically produced.

- BDIH

  Usesrawmaterialssourcednaturallyorthroughapprovedecological processes.

  Some plant materials are requiredtobeorganic. Onlycertainsyntheticpreservativesareallowed.

- SoilAssociation

  Atleast95%oftheagriculturalingredientsmustbeorganicbyweight.

  Onlyspecificnon-organicingredients,processingaids,andwaterare permitted.

  Waterisexcludedfromtheorganiccalculation.

  Productscontaining70-95%organicingredientscanbelabeledas "contains X% organic ingredients.

- ICEA

  Requires plant and animal materials to be organic. It prohibits certain ingredientsandchemicalprocesses.

- COSMOS

  Requiresatleast20%organiccontent(exceptforrinse-offproducts and powders, which require 10%).95%ofphysicallyprocessedagriculturalingredientsmustbecertified organic. It onlyallowsspecificchemicallyprocessedagriculturalingredients.

- NATRUE

  Specifies minimum levels of natural and "derived natural" substances based on product type. Most products must contain at least 20% natural substances, with no more than 15% being derived natural substances.Atleast95%ofnaturalsubstancesfromplantandanimaloriginsmust be organic.

  Alwayscheckthelabelforthesecertificationstoensuretheproduct'sorganicorigin. Start caring for your skin with certified organic cosmetics.

Factors for opting Organic Cosmetic Products over Conventional Products

- PriceSensitivityinPurchasing Decisions

As of 2018, price was the main factor affecting consumers' choices regarding natural or organic beauty and personal care products. Other important considerations included the need for products to be BPA-free and cruelty-free. However, the high costs and limited availability of organic cosmetics were significant barriers for many consumers.

- Harmful Ingredients in Conventional Skin Care Products

Many non-organic skin care products contain synthetic chemicals that can be harmful to health, including sodium lauryl sulphate, mineral oils, and possible pesticide residues. Studies have shown that these products may also include ingredients like petroleum, parabens, and mineral oil, which—when used over time—can cause skin irritation, disrupt hormones, damage organs, and even increase cancer risk. Mainstream beauty products often feature dangerous compounds such as formaldehyde, phthalates, and heavy metals, which can be absorbed through the skin and enter the bloodstream.Organic skin care products,on the other hand, use natural,safer substitutes that are safe for long term usage in place of such harmful component.Toxic compounds

found in personal care products can accumulate in the body and eventually cause health hazards, according to research from the Campaign for safe cosmetics.

- Organic Products Are Less Likely to Cause Allergies

Organic skin care products are less likely to cause irritation, inflammation or allergic reactions because they don't include harsh synthetic ingredients.When allergies do arise,they are usually associated with natural substances (such as peanuts or strawberries),which helps in identify the cause.

- Organic Skin Care Products Offer Greater Effectiveness

Compared to conventinally cultivated plants, organic plants frequently have higher amounts of essential anti oxidant vitamins. These ingredients remain pure because they are grown without the use of pesticides or herbicides,providing additional advantages for body and skin.Futhermore, conventional skin care products often include only 5% to 10% active ingredients,but organic treatments can have up to 95% active components.

GoingOrganic: BenefitsYourSkin

Non-organic products that contain synthetic substances may yield immediate benefits,but they can also be intrusive and dangerous,resulting in invisible harm.Long term usage of these chemicals can weaken and damage your skin as your body tries to cope with these foreign substances,even if they may provide instant aesthetic benefits including minimising blemishes ,sunspots and wrinkles. Reduced oxygen exchange in the skin may result from this, increasing the risk of sunspot development and premature ageing .On the other hand,you can get real nutritional advantages by using natural organic skin care products.It is well recognised that a variety of nutrients including honey,coconut oil, shea butter and aloevera, may nourish,moisturise,calm,and encourage soft,smooth skin. Organic skin care products are safer and kinder to your skin over time,although the effects might not show up right way.

Natural Ingredients in Organic Skin Care Products

Plants and other naturally derived ingredients are the source for certified organic products. These organic elements are grown without the use of pesticides, herbicides, synthetic fertilizers, GMOs, or other harmful additives. As a result, your skin and body receive only pure, natural ingredients that are safe and non-toxic.

Supporting Cruelty-Free Skin Care Products

The beauty industry has been criticized for relying on animal testing to determine the safety of products for human use. However, organic products do not need such testing since their natural ingredients are inherently safe and non-toxic. By opting for

organic skin care products, you are supporting cruelty-free alternatives and playing a part in the fight against animal testing within the industry.

Sustainabilityand EthicalPractices

Many organic beauty brands focus on ethically sourcing their ingredients and adhering to fair-trade practices.By opting for organic products, consumers support companies that prioritize sustainability and the fair treatment of workers. A survey byFICCI(FederationofIndianChambersofCommerce&Industry)foundthat71%of consumers prefer natural and cruelty-free products.

HelpingtoPreservetheEnvironment

Organic products are made from naturally grown ingredients that do not rely on harmful pesticides and fertilizers, resulting in a minimal environmental impact, especiallyonsoil,water,andair.Organicfarmingbenefitswildlife,reducespollution from chemical sprays, and generates less carbon dioxide and hazardous waste. By using organic skin care products, you help decrease your environmental footprint and support sustainable practices. Organic and natural cosmetics are typically produced using sustainable methods that avoid synthetic pesticides and fertilizers, lessening environmental harm. Additionally, many organic beauty brands use biodegradable packaging to reduce plastic waste. The Soil Association notes that organic farming helps preserve biodiversity, enhances soil health, and reduces pollution compared to conventional farming methods.

A Decade of Transition of Cosmetic and Wellness products to Organic Way

Natural and organic cosmetics are significantly shaping the cosmetics landscape. Although "beauty" remains the primary association with cosmetic products, more consumersarelookingforqualitieslike"sustainable,""environmentallyfriendly,"and "ethical"intheirpurchases.Since they are fundamental to their core beliefs and commitment to protecting bio diversity,the environment and human health,natural and organic cosmetics are a perfect example of these ideals .Indian consumers have been drawn more and more to organic health and cosmetics over the last ten years for a variety of reasons.

Market Digitalization

With e- commerce sites like Nykaa,Purplle and Amazon giving customers a greater access to arrange of beauty items,the digital revolution has greatly accelerated the expansion of the cosmetics industry. Customers nation wide may now shop for beauty products more easily thanks to this change.With INR 2,440 crore (about USD 330 million) in FY 2021, Nykaa a prominent online retailer demonstrated the cosmetics industries significant shift to digital platforms.

Origination of Indian Organicbrands

By providing goods that are suited to the particular taste and skin requirements of Indian consumers, local businesses are significantly expanding their market share. To appeal to consumers, companies like Sugar Cosmetics, Mama Earth and Forest Essentials combine traditional Indian components with contemporary formulations. In 2021 Mama Earth that specialises in natural products free of toxins achieved unicorn status in the business with a valuation of USD 1.2 billion. By catering to local preferences this success story demonstrates how local preferences can help home grown firms flourish in particular.

This graph, which is a compilation of several reports, shows the expansion of the Indian market for Organic cosmetics and wellness goods between 2014 and 2024. The market has grown significantly, especially since 2019, which is indicative of rising consumer demand for Organic goods.

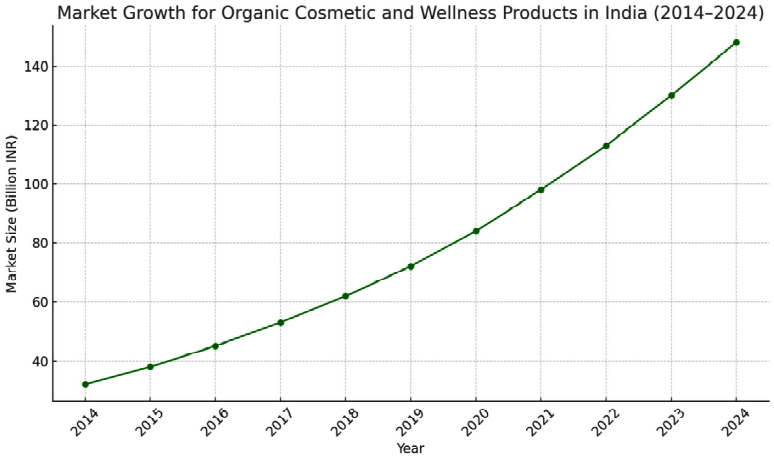

In FY 2024 the organic personal care market in India was valued at INR 83.68 billion. It is projected to grow at a compound annual growth rate in (CAGR) of approximately 23.72% to reach INR to 236.34 billion by FY 2029. According to one study the market is expected to generate approximately USD 997.42 million in revenue by 2025, with a projected annual growth rate of 5.74% (CAGR 2025-2029). Furthermore, according to another source the retail value of India's health and wellness industry was approximately USD 8.4 billion in 2018, and it is expected to nearly double to USD 16 billion by 2023, with a compound annual growth rate (CAGR) of 14% from 2019 to 2023.

When taken as a whole, these sources shed light on the market values and grow patterns of organic wellness and cosmetic products in India within the given time frame.

Growing Awareness of Health and Wellness

Customers are now increasingly aware of the potential harm that synthetic chemicals found in conventional duty products might cause. Sulphates,Parabens and artificial perfumes are among the ingredients that are increasingly linked to long term health issues and skin irritation. The demand for chemical-free, organic substitutes is increasing as a result of increased health and wellbeing consciousness.

Rise of Conscious Consumerism

The choices made by modern customers are environmental conscious.Theglobaltrendtowardssustainability,alongwithconcernsoverpollution, deforestation,andclimatechange,hasencouragedIndianconsumerstooptforeco-friendly,organicproducts.Organiccosmeticsandwellnessbrandsoftenemphasize cruelty-free,biodegradable,andsustainablepractices.

CelebrityandInfluencerEndorsements

Celebrities and influences have been crucial in marketing organic beauty and wellness products since the advent of social media. Customer behaviour has been impacted by Indian celebrities promoting Organic products or stressing the importance of natural beauty and overall health who follow trends created by influencers have been especially impacted by this.

GrowingInterestinAyurvedaandTraditionalKnowledge

Natural treatments and Ayurveda have a long history in India and are currently gaining popularity. Customers looking for conventional, holistic methods to skin care and health may find many organic beauty and wellness products intriguing because they are made from herbal and ayurvedic formulations. Businesses based on indigenous techniques has increased as a result of the renewed interest in Ayurveda.

RiseinDisposableIncomeandUrbanization

More Indian consumers now have the means to buy high end and goods, such as organic cosmetics thanks to the countries economic expansion during the last ten years. The demand for these items has been further fuelled by lifestyle changes brought about by urbanisation, where health and beauty have become essential components of self care regimens.

ConcernsOverSideEffectsofConventionalCosmetics

Long term usage of synthetic cosmetic products has been linked to an increase in allergies, skin disorders and other impacts. Consumer taste are changing as a result of the perception that organic alternatives are safer and better suited for long term use or sensitive skin.

ImprovedAvailabilityandProductVariety

The availability of organic wellness products and cosmetics has increased dramatically during the past ten years. Numerous foreign and Indian brands have joined the market, providing a broad choice of goods at various price points. Customers have found it easier as a result of the greater accessibility, both online and in physical places.

COVID-19 and WellnessFocus

The pandemic hastened the transition to natural and Organic products by underscoring the significance of health and well being. Organic products are becoming more popular as consumers place a higher priority on their general well being and look for items that support holistic health in addition to improving appearance

GovernmentSupportandCertificationStandards

Customer trust has increased as a result of government programs supporting sustainability and organic farming as well as the implementation of certification requirements for Organic goods. Customers are reassured that the items full fill quality and environmental criteria by certifications such as USDA Organic, ECOCERT and India Organic.

These elements along with a changing perception of well being and beauty have fuelled India's increasing trend towards organic wellness and cosmetics. Due to customer's growing alignment of their purchases with sustainability and health principles, these changes have helped the organic beauty and wellness sector in India to grow steadily.

Conclusion

From 2014 to 2024, there has been significant growth in beauty and wellness products in India, particularly in organic cosmetics. This paper concludes that various factors, both positive and negative, influence the purchasing decisions for organic cosmetics. Today, consumers are increasingly aware of the products they use.Since2020,followingtheCOVID-19pandemic,therehasbeenanoticeableshift from synthetic and conventional products to organic cosmetics. Consumers often confuse natural and organic cosmetic products; however, the Government of India has introduced several certification standards to support the promotion of organic options.Theincreasingawarenessanddemandfororganicproductsareundergoing a transformative change that benefits both people and the environment.

References

1. Well, B. (2021, July 14). 7 Reasons Why Organic Skin Care Products are Better for You. Be Well Company.
2. https://bewellcompany.com/blogs/healthy-skincare/7-reasons-why-organicskin-care-products-are-better-for-you1
3. Ledesma, A. (2020, May 25). 3 reasons to switch to natural and organic cosmetics. NATRUE. https://natrue.org/3-reasons-to-switch-to-natural-and-organic-cosmetics/
4. Kothari, S. (2022, June 20). Factors why organic skincare products are driving the current market. The Times of India.https://timesofindia.indiatimes.com/blogs/voices/factors-why-organicskincare-products-driving-the-current-market
5. Cosmetic Business. (2021, March 23). Organic cosmetics: What are they all about?https://cosmeticsbusiness.com/organic-cosmetics-what-are-they-all about—175445
6. Shukla, A. (2024, June 1). Why the Indian beauty industry is more exciting than ever. The Times of Indiahttps://timesofindia.indiatimes.com/life-style/beauty/why-the-indian-beautyindustry-is-more-exciting-than-ever/article
7. Minhas, A. (2024, March 21). Beauty and personal care industry in India.Statista.https://www.statista.com/topics/5039/beauty-industry-in india/#topicOverview
8. GlobalData. (2022, April 21). Driven by organic and natural products, Indian skincare market to expand at 10.2% CAGR through 2026, finds GlobalData.GlobalData.https://www.globaldata.com/media/consumer/driven-organic-naturalproducts-indian-skincare-market-expand-10-2-cagr-2026-finds-globaldata/
9. Indian Retailer. (2022, February 23). The rising demand for sustainable beauty brand. Indian Retailerhttps://www.indianretailer.com/article/retail-people/sustainability/the-risingdemand-for-sustainable-beauty-brands.a7328
10. India Today. (2024, July 22). Understanding organic products: Health and environmental benefits explained. India Today.https://www.indiatoday.in/amp/information/story/understanding-organicproducts-health-and-environmental-benefits-explained-2569778-2024-07-22

11. Research and Markets. (2024, December 30). India organic personal care market analysis report 2024–2029: Direct-to-consumer brands flourish in India's expanding organic personal care space. GlobeNewswire

12. Statista. (2024, February 15). India - Health and wellness retail market value 2014–2023. https://www.statista.com/statistics/1061614/india-health-and-wellness-retail-market-value/

13. Statista. (n.d.). Natural cosmetics - India | Statista market forecast. Statista. https://www.statista.com/outlook/cmo/beauty-personal-care/cosmetics/natural-cosmetics/india

Behind the Screens: The Business of Financial Influencers

Discipline: Commerce

Kiran Toms
Research Scholar, Department of Commerce, GovernmentCollege, Attingal,
University of Kerala, Thiruvananthapuram, Kerala, India
Email: kirantoms123@gmail.com

CMA (Dr.) T. Rajesh
Professor, Department of Commerce, GovernmentCollege, Nedumangad,
University of Kerala, Thiruvananthapuram, Kerala, India
Email: rajeshvjd@rediffmail.com

Received: 22.04.2025 | Revised Submission: 21.05.2025 | Accepted: 29.05.2025 | Available Online: 05.06.2025

Abstract

Financial Influencers (Finfluencers) have brought changes to the investment arena by sharing financial knowledge with people quickly through social media. To study them, this work uses methods from different fields to approach their business models, psychological outcomes, rules and ethical concerns. Influencers help spread global financial knowledge, but their drives to make money may occasionally cause them to act incorrectly. Using algorithms, small online groups and no formal checks they let wrong facts to be distributed. Finally, the paper suggests methods for industry platforms, regulators and investors to help steer digital finance toward responsible development.

1. Introduction

Thanks to modern technology, "Finfluencers" are now very influential in guiding people to invest. Many people get financial tips and strategies straight from people on YouTube, TikTok, Instagram and X (the former Twitter). Despite how democratized fundraising has become, making it easier for people to learn about, there are also serious consequences: false news, influence on equity and gaps in government supervision. This study looks at how influencers have two roles, as instructors and promoters and how their financial interests relate to patient trust, the acceptability of information and dangers in the financial industry.

2. Review of literature

In their study published in 1956, Horton and Wohl described how audiences feel emotional emotions toward media personalities without a response. This idea works in digital settings as well, since influencers, especially finfluencers use their perceived

closeness to gain trust with their fans (Anderson & Jiang, 2018). Because of these relationships, followers are more likely to trust the information they get.

Kahneman (2011)pointed out that cognitive biases, for example FOMO, are common in the way people make financial decisions. This information helps us see why people are encouraged to adopt risky behaviours suggested by finfluencers and sometimes forget to think things through (Kaplan & Haenlein, 2020).

Chen et al. (2021) and Popper (2021) connected finfluencers to the broader impact of social media on traditional financial authorities including brokers and CNBC. These studies show that crowd-sourced financial tips caused the market volatility seen in the GameStop short squeeze because many people acted the same way online.

Tufekci (2018)pointed out that digital platforms can be used to share information but they tend to show content that gets the most attention from users. As a result, emotionally involving but misleading financial stories become more noticeable to many, increasing the likelihood of misinformation for ordinary people.

Authorities are now recognizing these issues. The United States' SEC (2021) and India's SEBI (2022) agree that the existing means of disclosure do not address challenges from influencer marketing across borders. Despite the FTC (2022) making new rules for sponsored content, companies continue to violate them. According to Smith (2020), a major issue found in affiliate-driven marketing is repeated conflicts of interest which illustrates the need for strong rules and more openness in finfluencers' activities.

3. Objectives

To analyse the revenue systems and business practices of financial influencers, to see if their content neutrality is influenced.

To study the psychological, regulatory and ethical problems in Finfluencer's posts, with suggestions for reducing the risks to investors.

4. Methodology

This study uses a structured approach to review academic papers, industry guidelines, media articles and public records to explore how financial influencers influence modern financial markets. After studying case studies and current research, various aspects of cash settlement in the UK are brought to light. Experts from different fields such as finance, media studies and psychology join forces to design a model for understating how influencers impact the world of retail investments.

5. The Evolution of Financial Content

Financial advice was once provided by experts, financial advisors or outlets like CNBC. But these days, you can see snippets of sauce from X and Instagram on your social feeds. On the bright side, learning money matters can be easier and more engaging, but flashy and viral info is sometimes easier to find than actual useful advice. It is young investors in particular who are drawn to these easy-to-understand videos, helping to grow this latest style of financial education. When the GameStop hype occurred in 2021 and trading rose during the pandemic, finfluencers played an even bigger role in how people invested.

6. Types of Finfluencers

Finfluencers are often grouped by what they know, the method they use to share information and whom their posts are aimed at. Every kind of article serves its own purpose in forming the habits of retail investors.

Certified Professionals: You can count onthem since they are licensed like CFA and CFP and follow regulations to advise you. Most of what they show is informed by research, yet some find it less exciting when viewing casually.

Self-taught Financial Bloggers: People without formal knowledge in finance who talk about their investment adventures. Even though they are easy to understand, their solutions are often too basic and don't always work.

Tech-Driven Influencers: These types of creators rely on tools or data analytics to offer automated insights and stock selection plans. They are designed for tech-savvy users, but sometimes appear confusing and cold.

Lifestyle-Based Influencers: Some influencers mix tips for managing finances with dreams of achieving FIRE (Financial Independence, Retire Early). The types of messages they present attract a young audience, though some of their guidance oversimplifies key financial ideas.

Niche Experts: Very focused on crypto, real estate or day trading by sharing specialized insights. Nevertheless, they could favour their area of expertise and encourage strategies with big dangers.

7. Business Models and Monetization

Most finfluencers earn money by offering education and including advertising for financial services. While they help businesses continue, they can affect the unbiased balance of different views.

Sponsored Content: Many brands sponsor content created by finfluencers to introduce people to financial products. These promotions seldom include real disclosures which creates transparency problems.

Affiliate Marketing: Influencers post referral codes and earn payment when followers act on them. As a result, sometimes, the recommendations are for costly networks instead of helpful products.

Ad Revenue: YouTube and Instagram earn money for influencers by counting views and the level of audience engagement. Therefore, companies tend to publish entertaining content, even if it is not as accurate as it could be.

Subscription Services: You can gain access to unique content by signing up with newsletters, joining Discord groups or using Patreon for a monthly fee. They bring together devoted followers yet often make finfluencers feel they must give out useful advice all the time.

Digital Products: Creating e-books, online courses and webinars gives you a way to earn from home. While some programs are genuinely useful, a few try to make you sign up so they can sell content you could get elsewhere for free.

8. Psychological and Behavioural Influence

Many finfluencers grow close to their followers through emotional relationships that produce trust and intimacy. Because of this supposed bond, participants are more likely to accept directions given by the leader.

Herd mentality is common, where investors will blindly follow trends that influencers encourage, mainly during times when something is trending online. Because of this attitude, many individuals avoid making their own assessments, making the market less stable.

Followers sometimes act rashly thanks to **FOMO** and overconfidence when something is marketed as a must-see, must-know event. When these triggers act, they can lead people to act less sensibly with their finances and risk losing more.

9. Regulatory Landscape

To make sure that influencer marketing is transparent, there are now disclosure rules put in place by the SEC (U.S.), SEBI (India) and FCA (UK). Nevertheless, it is difficult for enforcement to keep up because of the large amount of material and continuous developments on social media.

Many people who are influencers do not tell their fans when they promote products for money which is misleading and illegal. It gets more confusing because many influencers also have followers from different countries and regulatory bodies.

Only a few platforms have tried to make things clearer, leaving most without any automatic way to monitor or stop violations. Coordination needs to increase between the platforms and the regulators to ensure retail investors are well protected.

10. Ethical Concerns

Many times, the information from finfluencers raises ethical problems that distract investors and create uncertainty in the market. People have these concerns due to false advertisements, hidden information and exploitation of followers' beliefs.

Pump-and-Dump Strategy: A few influencers try to increase the cost of stocks they don't really support, only to then sell them for their own gain. Because of this attitude, inexperienced investors get caught buying at rates that are much higher than what they should be.

Undisclosed Sponsorships: Influencers keep promoting financial products but fail to say they are getting paid for them. As a result, followers think the advice they get is fair and truthful.

Exaggerated Claims: Many new investors become interested in risky options due to big claims of wealth and high returns. This material leads to unrealistic goals and can make someone act foolishly with their finances.

To solve these ethical issues, there should be tighter disclosure rules, more accountability on platforms and more attention to money on behalf of users.

11. Discussions

By being both information providers and companies, finfluencers find it tough to separate promoting knowledge from making money. While most explain difficult topics and encourage financial knowledge, their materials are sometimes adjusted to benefit monetization.When sponsorships and affiliate business are invisible, it becomes difficult for followers to know the difference between reliable recommendations and advertising. As a result of this confusion, people may receive biased opinions and trust the wrong services.

Because content can become viral on social media networks, the advice often stresses headlines over truth. As a result, people are more likely to hear misleading news, especially during memorable market events such as the GameStop rally.Being influenced by parasocial bonds and herd behaviour reduces a retail investor's ability to

think critically. That's why a lot of people make impulsive decisions based on advice that does not provide the right details.

A proper way to overcome these problems is to motivate innovation, make sure ethics is followed and support the education of those who invest.

12. Conclusion

Because of finfluencers, there is now more access to financial education for everyone in the retail investing market. Since their goals are often in conflict with fair advice, this can result in wrong information, market tampering and harms to people who invest. Despite the best efforts of regulators, their rules are not always applied equally and the unique issues of social media platforms are not considered in current regulations. Despite the problems, working with finfluencers has made financial literacy better for investors under the age of thirty. We should now adopt a balanced method to make sure finfluencers' contributions to financial markets remain open and accountable. Part of this is for platforms to promote openness, regulators to set up the same guidelines and investors to carefully check the advice they receive.

13. Recommendations

It is important to put in place several essential recommendations to maintain responsible influence in digital finance. **Platforms** should automatically reveal all sponsored content as soon as it is posted and put unproven financial advice lower in their rankings. Because of this, misinformation will be less common and things will be more straightforward. A worldwide agreement on disclosure should take place for **regulators**, so that those who engage in pump-and-dump schemes face fitting penalties. **Investors** should receive information to help them analyse influencers' backgrounds, recognize biased advice and avoid following information without questioning it. Doing these will make things more open and trustworthy for retail investors.

References

1. Anderson, M., & Jiang, J. (2018). Teens, social media & technology 2018. Pew Research Center. https://www.pewresearch.org/internet/2018/05/31/teens-social-media-technology-2018/
2. Chen, L., Zhang, R., & Huang, Y. (2021). The rise of social media in retail investing: A study on finfluencers and investor behavior. *Journal of Behavioral Finance*, 22(4), 345–359. https://doi.org/10.1080/15427560.2021.1891934
3. Federal Trade Commission (FTC). (2022). Disclosures 101 for social media influencers. Retrieved from https://www.ftc.gov
4. Horton, D., & Wohl, R. R. (1956). Mass communication and para-social interaction: Observations on intimacy at a distance. *Psychiatry*, 19(3), 215–229. https://doi.org/10.1080/00332747.1956.11023049
5. Kahneman, D. (2011). *Thinking, fast and slow*. Farrar, Straus and Giroux.
6. Kaplan, A. M., & Haenlein, M. (2020). Rethinking the finfluencer: How social media impacts investing decisions. *Business Horizons*, 63(5), 563–572. https://doi.org/10.1016/j.bushor.2020.06.001
7. Popper, N. (2021). The amateur investors fueled by TikTok and Reddit. *The New York Times*. Retrieved from https://www.nytimes.com
8. Securities and Exchange Board of India (SEBI). (2022). Consultation paper on regulating finfluencers. Retrieved from https://www.sebi.gov.in
9. Securities and Exchange Commission (SEC). (2021). Investor alert: Social media and investment fraud. Retrieved from https://www.sec.gov
10. Smith, J. (2020). Influencer marketing and financial disclosure: The risks of affiliate conflicts of interest. *Journal of Marketing Ethics*, 8(2), 101–114. https://doi.org/10.1177/2056305120933297

Unveiling the Complex Web of Expropriation: A Comprehensive Review

Discipline: Commerce

Aleena Maria Zacharia
Research Scholar, Department of Commerce, Government College for Women, Thiruvananthapuram, University of Kerala, India
Email: researchaleenamaria@gmail.com

Krishna Babu
Research Scholar, Institute of Management in Government, Thiruvananthapuram University of Kerala, India
Email: krishna.babu.research@gmail.com

Dr. Biju S.K.
Professor, Department of Commerce, Government College for Women, Thiruvananthapuram, Kerala, India
Email: bijubodheswar@gmail.com

Received:09.04.2025 | RevisedSubmission:17.05.2025 | Accepted:20.05.2025 | Available Online: 05.06.2025

Abstract

Land in India serves as a symbol of social identity, status, power, and riches inaddition to being a source of food and subsistence. The legal framework foracquiring, possessing, and managing property for people and corporations is providedby the notion of property regime. However, the governments must use the eminentdomain principle to take over vast swaths of land in order to acquire them forpublicpurpose to preserve the momentum of growth and development. In India, the stateprimarily uses the Land Acquisition Act and the Right to Fair Compensation andTransparency in Land Acquisition, Rehabilitation, and Resettlement (RFCTLARR)Act 2013 to exercise its eminent domain powers. Despite the fact that the Act containsmechanisms for offering financial compensation to the affected parties, the lossessustained as a result of the purchase cannot always be put into monetary terms. Thepurpose of the paper is to study the body of knowledge regarding India's lawsgoverning land acquisition, eminent domain, and the concept of public purpose. Thestudy also aims to identify the effects of expropriation that the impacted people haveto deal with, and the resettlement and rehabilitation practices adopted by thegovernment.

Keywords: *Land, Expropriation, Public Purpose, Eminent Domain, Resettlement, Rehabilitation*

1. Introduction

Every element of human existence, including the political, social, legal, emotional, and environmental facets, is impacted by land, which is an essential natural resource (Raha, 2021). No one wants to lose their property, even if it means losing their life, because everyone values it so highly. The importance of land and the innumerable violent wars that have been fought over it by monarchs, nation-state rulers, and many other parties, as well as by smaller organizations, families, and people at their own levels, have been demonstrated again and time again throughout history (Shokeen, 2021). Every person on the planet needs land in order to live and work.

The most important aspect of any human being's life is land, whether it be as a place of residence or a source of income. As a result, there is tremendous demand to possess property for both current and future generations worldwide. For future and increased output, it is the single limited resource that all other productive and developmental activities rely on (Shorey, 2017). Land is an essential resource for the physical, commercial, and financial growth of every country's infrastructure and industry (Muyombano, Espling, & Pilesjö, 2018). As the global economy grows rapidly, infrastructure is necessary to keep up the speed of growth and development.

In order to do this, a significant quantity of land would need to be purchased, and individuals would be forcibly removed from their sociocultural surroundings and deprived of their land, means of subsistence, and place of residence (Choudhary, 2009).

2. Problem Outline

This analysis examines the legal framework that governs property rights, acquisition, and management in the context of eminent domain used for "public purpose." It delves into the specifics of land expropriation in India. The study, which focuses on the Land Acquisition Act and the RFCTLARR Act of 2013, intends to highlight the shortcomings and difficulties in reimbursing impacted parties, recognizing that the losses sustained transcend just monetary assessment.

A comprehensive review of current information regarding India's laws pertaining to land acquisition, eminent domain, and public purpose is one of the key goals. Another is an examination of the concrete and intangible impacts that expropriation has on the people and communities that are affected. Furthermore, the review evaluates government resettlement and rehabilitation practices critically in an effort to provide nuanced insights that heighten awareness, contribute to informed discourse, and possibly direct policy improvements in addressing the country's complex land expropriation implications.

3. Study Framework

This study will conduct a systematic review of the existing literature to identify the effects of expropriation that the impacted people have to deal with, and the resettlement and rehabilitation practices adopted by the government. The three-step process-search, selection, and analysis-proposed by Grant and Booth (2009) has been used in this study to transparently and methodically assess scientific knowledge in the field of research.

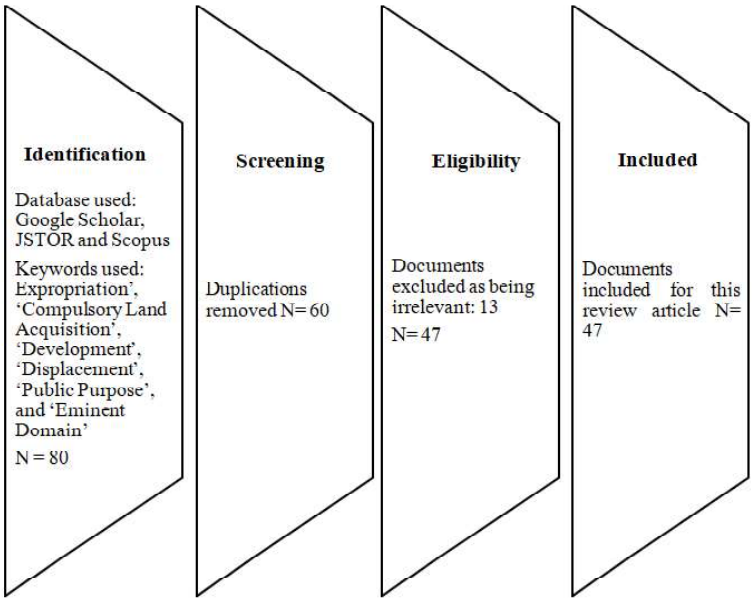

Figure 1 Research Flowchart

This study reviewed articles from reputable journals to ensure publication quality (Wallace & Wray, 2016; Xia et al., 2018), using multiple trusted databases such as Google Scholar, Scopus, and JSTOR to gather comprehensive data for a systematic review (Goopio & Cheung, 2021). A keyword-based search—using terms like 'Expropriation', 'Compulsory Land Acquisition', 'Development', 'Displacement', 'Public Purpose', and 'Eminent Domain'—yielded 150 publications. After removing duplicates, 100 articles remained. Following Lu and Stepchenkova's (2015) method, titles and abstracts were screened for relevance and quality, resulting in 80 studies for detailed analysis. These were examined using content analysis to identify key issues and assess government resettlement and rehabilitation practices. Thematic analysis was then applied to classify emerging patterns (Farouk et al., 2021). Each author conducted the

process independently to avoid bias, with theme naming based on individual interpretation.

4. Results and Discussion

4.1. Development Induced Displacement

Development is a given in developing countries like India. Among the numerous developmental initiatives being carried out are megaprojects such as power plants, roadways, railroads, and infrastructure upgrades (Kang & Sung, 2018). These projects require a substantial quantity of land to be built. When vast tracts of land are bought from private owners, populations are uprooted (Agrawal, 2020). Displaced people miss out on many things, some of which are vital to their lives, like homes, productive resources, culture, livelihoods, and surroundings that suit their skills and habits, as well as social networks and a sense of community.

People have been displaced not merely from their homes but also from their homelands, to which they may have been bonded by ancestry (Mary Liya, 2014).

Displacement brought on by development totally breaks the connection between people and their land, upsetting history, culture, connected memories, and enduring communal bonds (Challa, 2013). Any societal change may be beneficial to certain groups while being detrimental to others. Development aims to benefit society, but in the process, it uproots people and deprives them of a number of essentials, such as homes, productive assets, culture, livelihoods, environments that are suitable for their skills and practices, community networks, and a sense of belonging (Sharma, 2016). The rate of displacement is not decreasing. According to Hirsh et al. (2020), the planning process actually assumes that displacement is unavoidable. There is an effort to portray it as a chance to enhance the living conditions of the displaced and to defend it as a necessary expense of growth. The state's failure to rehabilitate the displaced and prevent them from becoming the sacrificial lambs of the development process, the creation of internal refugees, and the poverty of the displaced are all dismissed as regrettable byproducts of economic growth (Prabal & Hafizur, 2018). Conveniently, the initial deprivation of the displaced has been exploited to imply that development could only be advantageous to them. A first step toward better legislation is a reevaluation of the human costs of development initiatives. To provide victims and potential forgets of mass displacement concrete rights and to limit state power in this area, legal change is crucial (Shim, 2015).

4.2. Eminent Domain

Industrial and infrastructure projects have two options for acquiring land: they can use the market route (i.e., by negotiating with the landowners) or they can use the

government's eminent domain rights. Eminent domain is the state's inherent right to acquire a citizen's private property in exchange for fair financial compensation(Lee, Kim, & Huh, 2021). The financial compensation is typically given at standard market rates. Governments around the world, including those in India, have this power and use it (Mohanty, 2009). Eminent domain, also known as expropriation, refers to the state's authority to appropriate private property for public use (Muyombano, Espling, & Pilesjö, 2018). This power grants governments the right to compulsorily acquire land, with compensation, to serve the public interest (Deininger, 2003). The doctrine of eminent domain is rooted in the principle that the state or sovereign holds ultimate authority over all property within its jurisdiction, allowing it to take private property for public purposes (Singh, 2016).

Over time, the exercise of eminent domain has been conditioned on compensating the affected property owners, ensuring that private land can only be appropriated upon providing recompense (Umamaheswari & Latha, 2018). Essentially, the doctrine asserts that the state, as the sovereign power, possesses the authority to appropriate private land for public use, subject to compensation (Kumar, 2017).However, the use of eminent domain has often led to resistance from landowners, particularly when compensation is perceived as inadequate, and when land acquisition results in involuntary displacement, adversely affecting livelihoods (Indian Infrastructure Report, 2009).The specific application of eminent domain laws varies across countries and within jurisdictions over time. In the Indian context, such laws generally encompass two components: a specified minimum compensation for acquired land, and a provision that once a certain portion of the required land has been acquired, remaining landowners must sell at the established price (Chowdhary & Chowdhary, 2016).

The underlying principle of state acquisition of private property is based on the legal maxims *salus populi est supreme lex* (the welfare of the people is the supreme law) and *necessitas publica major est quam privata* (public necessity is greater than private necessity) (Kumar, 2017).

4.3. Public Purpose

"A purpose that is an object or aim in which the general interest of the community, as opposed to the particular interest of individuals, is directly and vitally concerned" is a requirement of the public purpose as defined by Judge Mr. Justice Batchelor. Accordingly, the most convincing public justification for land acquisition in India seems to be the creation of jobs in order to reduce poverty (Sinha, 2016). The government cannot rely solely on real estate markets to guarantee that real estate is purchased when and where it is required for the greater benefit in the public interest. The owner of the relevant real estate might not be interested in engaging in any form of deal.

The legal system gives the state or local community the authority to use the expropriation process in certain situations when there are no other options available in order to support and accomplish the intended public benefit (Šumrada et al., 2013). The law listed a few specific instances of public purpose, including town or rural planning, housing the impoverished and landless, "carrying out any educational, housing, health or slum clearance schemes sponsored by Government," and providing land for a government-owned corporation (Hoda, 2018). However, it is a bitter reality that when the government design and carry out railway, airport, or other development projects, a new segment of society known as "the evacuated" is created (Chengodan, 2022).

4.4. Land Acquisition Act

Land acquisition is, consequently, concerned with justice- absolute, distributive and re-distributive: all at a time and over the time! The gains for the gainers and losses for the losers are gigantic. This gainer-loser gap tends to widen over time with each instance of motivated land acquisition (Khan & Alam, 2015). Land acquisition in India denotes to the process by which the union or a state government in India obtains private land for the drive of industrialization, development of infrastructural amenities or urbanization of the secluded land, and provides recompense to the affected land owners and their reintegration and relocation (Umamaheswari & Latha, 2018). There have been a few unique rules that have remained utilized by both Union and state governments to get land from private people. A noteworthy bundle of them keeps existing (Kumar, 2019). Land acquisition Act 1894 governed the process of land acquisition till 2013 but on 1 January 2014, The Right to Fair Compensation and Transparency in Land Acquisition, Rehabilitation and Resettlement Act, 2013 came into force which now governs the land acquisition process in India and it has redefined the definition of public purpose and restricted its scope, earlier definition of the term "public purpose" was very wide and because of this wide scope for interpretation government abused the power of eminent domain for acquisition of land for public purpose (anjana, 2018). According to Singh (2016), the Land Acquisition Act of 1894 is the primary tool used by the Indian government to exercise its eminent domain authority. The Act outlines the procedures that must be followed by the state when purchasing land for a business or for itself. Due to its scarcity, land has historically been claimed by a number of different power structures (Arora, 2017). As a result, a set of rules offered a practical way to resolve these conflicts. Regretfully, a group of colonial minds—British people—who had little regard for the indigenous people created it. Those who were losing their land for the sake of the greater good were not adequately compensated by the ensuing law (Saxena, 2018).People discovered that their land was being taken away in what they believed to be a very cruel method. The law under discussion was enacted in 1894.

was most recently modified in 1984. Even after 117 years, not much has changed (Nandal, 2014). Mandatory land acquisition was regulated by the "Land Acquisition Act, 1894," which was more than 129 years old, until the passage of "The Right to Fair Compensation and Transparency in land Acquisition, Rehabilitation and Resettlement Act, 2013." In a completely different political, social, and economic environment, this Act was passed. However, despite independence, the Indian government hasn't significantly altered its acquisition policy to take into account modern demands and ideals. Since there have been several agitations, some of which have even turned violent and resulting in numerous fatalities, the Land Acquisition Act of 1884 has had social, legal, cultural, economic, and political repercussions (Kumar, 2018). Either Part II or Part VII of the 1894 Act may be used to purchase land. The discussion that follows demonstrates how the procedures outlined in these two sections differ somewhat. The latter is used for non-government enterprises, but the former is utilized when the acquiring entity is the federal government, state governments, or businesses that are either fully or partially owned or controlled by the state (Gogoi, 2018).

Additionally, it should be mentioned that although Part II land purchase is only for "public purposes," Part II acquisition can be for both "public purposes" and "non-public purposes," but the latter is only available for very specific purposes (Nandal, 2014). They passed "The Right to Fair Compensation and Transparency in land Acquisition, Rehabilitation and Resettlement Act, 2013" later that year. The Act's main goals were to ensure that individuals impacted received just compensation, comprehensive R&R, sufficient protections for their welfare, and full transparency throughout the land acquisition process (Raghuram & Sunny, 2015).

In order to concentrate on overall growth, the process was to be made more compassionate, open, inclusive, and educational. Additionally, it was to ensure that the acquisition process through mandatory provision not only results in the development of the area's infrastructure but also that the displaced families be included in the project so that the socioeconomic status of the people is enhanced in tandem with the development of the infrastructure, ultimately leading to the achievement of overall development (Shokeen, 2021).

4.5. Compensation

Neither the LA Act of 1894 nor Article 31(2) define "compensation." Additionally, it is not defined in Article 300A of the Indian Constitution. "Something awarded to someone in recognition of loss, suffering, or injury" is what the term "compensation" indicates. This doesn't have to be monetary. After the land is acquired, the displaced landowner should receive the appropriate compensation and receive the necessary

rehabilitation (Singh, 2023). In the majority of nations, the state uses compensation as its primary financial weapon to deal with expropriation, relocation, and displacement. Compensation is given almost magical qualities in official vocabulary, as though it could remedy all the negative effects of forced relocation, including uprooting, dispossession, mental distress, expropriation, and economic poverty.

However, in practice, compensation proves to be deceptive and ineffective, failing to bring about the healing miracles for which it is formally and poetically praised. Reconstruction is underfunded, and compensation is poor. The shocking reality is that many compensation-paying enterprises end up making people worse off rather than better off (Cernea, 2008). As part of larger development project expenditures, targeted investment funds must be directed to displaced people in order to adequately address damages compensation and accomplish policy goals in resettlement. Instead,then concentrating only on providing compensation, regardless of overall recovery, Cernea (2003) promotes a change from the traditional "economics of compensation" to an "economics of resettlement with development," placing more emphasis on the sustainable reestablishment of impacted people.

Additional investment resources for resettlement with welfare improvement can be acquired in a number of ways, most notably by distributing project-generated benefits to displaced people fairly, according to Cernea (2003). However, the topic of compensation is intricate and frequently hotly debated. Many Resettlement Action Plans (RAPs) lack a comprehensive economic feasibility analysis capable of assessing whether the proposed rehabilitation measures, including the creation of alternative livelihoods, will facilitate economic recovery (Lee, Lee, & Nam, 2018).

As a result, initiatives that evict people from vital productive resources and upend their economic structures are rarely backed by sufficient financial and economic resources to rebuild the livelihoods they destroy (Cernea, 2008; Mahalingam & Vyas, 2011).

Resettlement and Rehabilitation (R & R)

The LAA, 1894 did not make rehabilitation and resettlement (R&R) as the right of the displaced, project affected people and communities. As a result, the displaced people and communities of developmental projects have to suffer impoverishments like livelihood crisis after being displaced from their ancestral land, change in means of livelihood, breaking away from community bonding etc. It becomes necessary, to make a proper assessment of their poor conditions by the state to frame a comprehensive R&R policy. Therefore, what is of utmost necessity, to resolve development induced displacements are the implementation of a comprehensive and adequate policy for R&R to provide proper livelihoods and a quality lifestyle for the sustenance of these

marginalised people and communities on the new resettlement sites (Gogoi, 2016). An effective Resettlement & Rehabilitation programme has to approach resettlement as the management of risk and focus on livelihood reconstruction. So, displacement implies an unequal redistribution of costs and benefits. Although these negative social effects are typically unavoidable, it is crucial to reduce them and provide alternative relocation sites by building housing, roads, drinking water, electricity, hospitals, and other infrastructure, as well as offering appropriate, remunerative economic rehabilitation support(Amin, Gul, & Hassan, 2021). This will allow the negatively impacted individuals to return to at least their previous levels of living standards (Prabal & Hafizur, 2018). Both the project managers and the impacted lot must carefully develop and carry out the displacement and rehabilitation management plan with an integrated monitoring system (Rao & Venkateswarlu, 2020).

Effects of Expropriation

The government was able to purchase private lands according to the Land Acquisition Act of 1894. Despite numerous amendments, it is the only land acquisition law that has not fulfilled its intended function (Hassan, 2016). Displaced persons were only entitled to monetary compensation under the 1894 Act, which was still very little. Many people that are displaced come from the lowest areas and do not speak out against the abuse (Kumar, 2023). The ignorance of those involved in the property split has been another significant factor. Many business owners and supporters of the company gain additional advantages from this (Fatima, 2022). According to Kombe (2010), in order to review the current top-down approaches to compulsory land acquisition practices, institutionalize dialogue as a crucial land acquisition strategy, and establish dependable funding mechanisms for prompt and equitable compensation, policy and legislative reforms are required. Most significantly, obligatory land provision for resettling and putting displaced households back in their original positions, as well as a shift in mindset among public authorities, particularly professionals, are additional crucial factors (Sharma, 2022). The latter is especially true since "business as usual" procedures sometimes overlook how the urban property landscape has changed, particularly in relation to private property rights and the privatization of land (Kombe, 2010).

Land acquisition, particularly when it is a complete acquisition, breaks many ties and connections that are crucial for the formation of strong economic foundations as well as for the role it plays in character and personality development. The relocation disturbs people's political, sociocultural, and economic life, and starting over is exceedingly costly. In light of this, Syagga & Olima (1996) suggested that in order to lessen the trauma associated with relocation, the social compensation component should be given more weight in future settlement programs. It's also important to evaluate the

impacted individuals' social and cultural needs. Future land acquisition should take into account the remaining land's economic worth so that, in cases where the remaining portions are deemed uneconomic, the entire land should be purchased. However, the purchasing authority's ability to use the land will determine this (Syagga & Olima, 1996). Preventing poverty and enhancing resettlers' quality of life are the main objectives of any involuntary relocation process (Samal, 2017). Governments and technical organizations must plan for growth at the relocation and comprehend the economics of dispossession, poverty, and recovery in order to do this. Strong empirical data has demonstrated that these often-ignored and poorly understood hazards lead to severe impoverishment and cumulative deprivations (Panda, 2008).

It is clear from the consideration of project-related risks to individuals above that compensation for condemned assets alone will not be sufficient to reduce these risks. However, expropriation payouts remain the primary focus of almost all displacement strategies globally, rather than income re-establishment. Although expropriation laws offer compensation for properties that have been condemned, they neither promise nor seek to restore previous standards of living. Therefore, in contrast with. existing practice, Cernea (1999) concluded that the intrinsic socio-economic hazards of resettlement can and must be brought under control only through an encompassing approach of conserving livelihoods and re- establishing revenue streams (Cernea, 1999).

5. Findings

The intricate relationship between land, identity, and power is a cornerstone in India, where land bears profound cultural, social, and economic significance. Serving as a symbol of social identity, status, and wealth, it becomes indispensable for sustenance, acting as both a source of food and livelihood. However, this centrality of land is challenged by the legal framework and the concept of eminent domain, where the government, under the Land Acquisition Act and RFCTLARR Act 2013, exercises its right to acquire land for public purposes. While mechanisms for financial compensation exist, the losses incurred during acquisition are not always quantifiable in monetary terms, adding layers of complexity.Development-induced displacement becomes a focal point, driven by projects like infrastructure and power plants, resulting in large-scale land acquisition and the consequential loss of homes, culture, and livelihoods. Such societal changes, while functional for some, prove dysfunctional for others, prompting critical examinations of eminent domain. Governments, endowed with the right of compulsory land acquisition, face resistance and disputes, particularly in India, where it is governed by the Land Acquisition Act. Challenges encompass insufficient compensation, involuntary displacement, and negative impacts on livelihoods.

The concept of public purpose emerges as a justifying force for these interventions, emphasizing objectives that serve the general interest of the community, such as poverty reduction through employment generation. The evolution of land acquisition laws in India, transitioning from the Land Acquisition Act of 1894 to the RFCTLARR Act of 2013, reflects a desire for a more humane, transparent, and inclusive process, focused on overall development.Compensation emerges as a significant issue, with the term lacking a clear definition in the legal framework and often viewed as impotent and misleading. Additionally, resettlement and rehabilitation (R&R) challenges arise, as the LAA 1894 did not establish R&R as a right for the displaced, resulting in livelihood crises and community disruptions. Current Resettlement Action Plans (RAPs) often lack economic feasibility analysis and struggle to restore livelihoods.The effects of expropriation under the 1894 Act highlight dissatisfaction among the displaced due to minimal compensation. Ignorance among stakeholders further contributes to mistreatment, necessitating policy and legislative reforms for fair compensation, dialogue, and funding mechanisms. Finally, understanding the socio-economic risks of resettlement emphasizes the inadequacy of compensation alone, emphasizing the need for income re-establishment and safeguarding livelihoods. These findings underscore the multifaceted challenges surrounding land acquisition and call for nuanced legal, policy, and procedural frameworks to comprehensively address the socio-economic impacts on affected communities.

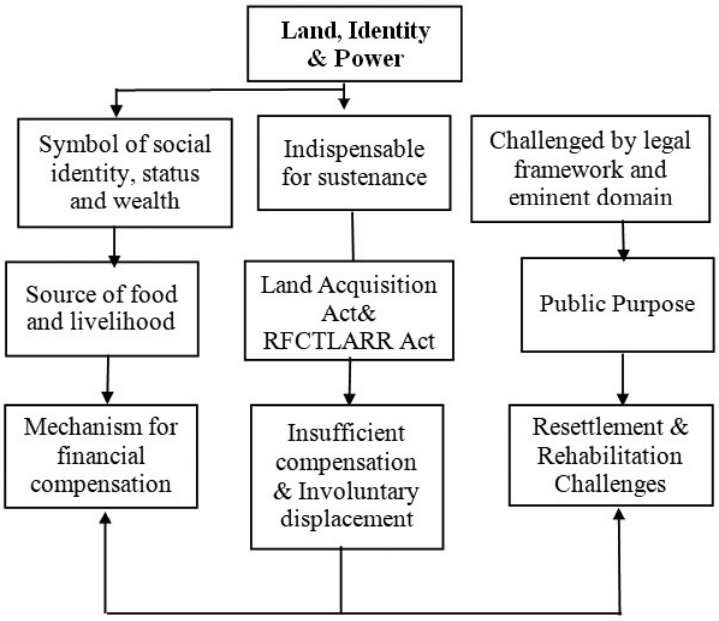

Figure 2 The Dynamics of Land, Power, and Displacement

6. Suggestions

- There is an urge for a holistic reassessment and updating of existing laws which involves proposing amendments for enhancing the transparency, fairness and protection of rights of the project affected people and communities.
- "Compensation" must be redefined and articulated within the legal framework, extending beyond the monetary terms. Exploring alternative compensation methods that account for the diverse nature of losses during land acquisition is advised. Thorough economic feasibility analyses are proposed to determine fair and adequate compensation, taking into consideration the multifaceted aspects of losses incurred.
- The establishment of R&R is an inherent right for displaced individuals and communities. The development and implementation of comprehensive R&R policies are recommended, concentrating on livelihood reconstruction, housing, education, healthcare, and overall community well-being. Incorporating economic feasibility analyses into R&R plans is stressed to ensure sustainability and effectiveness.
- The concept of "public purpose" needs to be scrutinized and redefined in alignment with community interest and welfare. Active participation and consultation with affected communities in decision-making processes are encouraged, emphasizing the incorporation of diverse perspectives that consider socio-economic and cultural aspects.
- There should be an open dialogue and constructive engagement between the government, project developers, and affected communities. Establishing effective conflict resolution mechanisms to address disputes arising from land acquisition, compensation, and resettlement is recommended.
- International collaboration shall be encouraged to learn from successful models in land acquisition, eminent domain, and resettlement. Engagement with global institutions and experts is proposed to draw insights for improving India's approach to land-related issues.
- The authority may establish a mechanism for ongoing review and adaptation of land acquisition laws and policies based on evolving socio-economic and legal contexts. Regular assessments of the impact of reforms and adjustments to address emerging challenges and opportunities are advocated. Fostering a culture of learning and improvement in the governance of land acquisition and related practices is considered integral to the overall strategy.

7. Conclusion

This research has shed light on the complex relationship between legal frameworks, socioeconomic repercussions, and the lived experiences of those impacted by land expropriation in India. The data shows serious flaws in the way that relocation, compensation, and resettlement are managed, even if land acquisition is frequently justified in the name of development and public purpose. The RFCTLARR Act of 2013, which replaced the colonial-era Land Acquisition Act of 1894, represents a step forward in principle, but there are still issues in practice, especially with regard to guaranteeing just compensation, reestablishing livelihoods, and protecting the rights and dignity of displaced populations.

The research emphasizes the urgent need for a more open, inclusive, and fair land acquisition procedure that puts human welfare and national development objectives foremost. India may advance toward a development model which is not just progressive but just by integrating social impact evaluations and economic feasibility with community-centric policies and legislative changes.

References

1. Mohanty, N.(n.d). India Infrastructure Report 2009
2. Mohanty, N.(2009). India Infrastructure Report 2009
3. Shokeen,O.(2021). Socio-Legal Impact of Land Acquisition for Industrialization in West Bengal: A Study
4. Shorey, B.M. (2017). Land Acquisition in Punjab A Study of Causes, Processes and Impacts
5. Choudhary, T.(2009).India Infrastructure Report 2009
6. Agrawal, A. (2020). *Effects of Development Induced Resettlement and Rehabilitation on Gender A study with reference to NTPC Projects*. Shodhganga@INFLIBNET. http://hdl.handle.net/10603/337295
7. Mary Liya, C. A. (2014). *Socio economic impact of displacement A study of Vallarpadam Container Terminal, Kochi*. Shodhganga@INFLIBNET. http://hdl.handle.net/10603/42080
8. Kumar, U. V. (2017). *A Legal Study of Emerging Dimensions of Land Acquisition Laws in India*. Shodhganga@INFLIBNET. http://hdl.handle.net/10603/246512
9. Kumar, V. V. (2019). *Shodhganga@INFLIBNET: The concept of eminent domain and land acqusition a special reference to kerala and under theconstitution of India at the present scenario*. Shodhganga@INFLIBNET. http://hdl.handle.net/10603/484949
10. Chowdhary, & Chowdhary. (2016). Holdout and Eminent Domain in Land Acquisition. *Indian Economic Review, JSTOR*, *51*(1/2), 1–19.
11. Umamaheswari, R., & Latha, A. (2018). Doctrine of Eminent Domain in India. *International Journal of Pure and Applied Mathematics*, *120*(5), 1771–1780.
12. Sinha, R. (2016, January). The Importance of Including 'Formal' Employment Generation in the Definition of 'Public Purpose' under the RFCTLARR 2013. *Journal of Land and Rural Studies*, *4*(1), 49–65. https://doi.org/10.1177/2321024915616672
13. Šumrada, R., Ferlan, M., & Lisec, A. (2013, May). Acquisition and expropriation of real property for the public benefit in Slovenia. *Land Use Policy*, *32*, 14–22. https://doi.org/10.1016/j.landusepol.2012.10.004

14. Sharma, R. (2016). *Development induced displacement a study of population affected by Jaipur metro project*. Shodhganga@INFLIBNET. http://hdl.handle.net/10603/106025

15. Chengodan, N. (2022). *Development Induced Land Acquisition Displacement and Resettlement A Study on Airport Projects in Kerala*. Shodhganga@INFLIBNET. http://hdl.handle.net/10603/424169

16. anjana, L. (2018). Land Acquisition for "Public Purpose" – A Critical Analysis. *SSRN Electronic Journal*. https://doi.org/10.2139/ssrn.3772691

17. Khan, & Alam. (2015). Inclusive policy options to highway land acquisitions in India. *International Journal of Multidisciplinary Research and Development*, *2*(1), 373–377.

18. Hoda. (2018). Land use and Land Acquisition laws in India Working paper Series. *INDIAN COUNCIL FOR RESEARCH ON INTERNATIONAL ECONOMIC RELATIONS*.

19. Nandal. (2014). Land Acquisition Law in India: A Historical Prespective. *International Journal of Innovative Research and Studies*.

20. Kumar. (2018). *Law relating to land acquisition in India emerging trends and issues*. Shodhganga@INFLIBNET. http://hdl.handle.net/10603/216079

21. Raghuram, & Sunny. (2015). Right to Fair Compensation and Transparency in Land Acquisition, Rehabilitation and Resettlement Ordinance 2014: A Process Perspective. *Research and Publications - INDIAN INSTITUTE OF MANAGEMENT AHMEDABAD, INDIA*.

22. Shokeen, O. (2021). *Compatibility of the right to fair compensation and transparency in land acquisition rehabilitation and resettlement act 2013 a critical appraisal in context of developing India*. Shodhganga@INFLIBNET. http://hdl.handle.net/10603/345975

23. Singh, V. (2023). *Determination of Compensation for Land Acquisition in India with Special Reference to National Capital Region NCR*. Shodhganga@INFLIBNET. http://hdl.handle.net/10603/485450

24. Cernea, M. M. (2008). Compensation and benefit sharing: Why resettlement policies and practices must be reformed. *Water Science and Engineering*, *1*(1), 89–120. https://doi.org/10.1016/s1674-2370(15)30021-1

25. Cernea, M. M. (2003). For a new economics of resettlement: a sociological critique of the compensation principle. *International Social Science Journal*, *55*(175), 37–45. https://doi.org/10.1111/1468-2451.5501004

26. MAHALINGAM, & VYAS. (2011). Comparative Evaluation of Land Acquisition and Compensation Processes across the World. *Economic and Political Weekly*, *46*(32). https://www.jstor.org/stable/23017763

27. Gogoi. (2016). LAND ACQUISITION, REHABILITATION AND RESETTLEMENT IN ASSAM: SOME ISSUES AND CONCERNS. *GUINEIS Journal*, *3*.

28. Fatima, S. (2022). *Critical analysis of Land Acquisition A Socio Legal Perspective*. Shodhganga@INFLIBNET. http://hdl.handle.net/10603/494037

29. Syagga, P., & Olima, W. (1996, January). The impact of compulsory land acquisition on displaced households. *Habitat International*, *20*(1), 61–75. https://doi.org/10.1016/0197-3975(95)00034-8

30. Cernea. (1999). Why Economic Analysis Is Essential to Resettlement: A Sociologist's View. *Economic and Political Weekly*, *34*(31).

31. Rao, G., & Venkateswarlu, V. (2020). A STUDY ON DISPLACEMENT AND REHABILITATION AT POLAVARAM PROJECT AREA IN ANDHRA PRADESH: ISSUES AND CONSTRAINTS. *International Journal of Creative Research Thoughts*, *8*(12).

32. Panigrahi. (2018, March). Development, Displacement and Rehabilitation: Indispensably Inter-Related. *IOSR Journal of Humanities and Social Science*, *23*(3).

33. Terminski. (2013). DEVELOPMENT-INDUCED DISPLACEMENT AND RESETTLEMENT: THEORETICAL FRAMEWORKS AND CURRENT CHALLENGES. In *dlc.dlib.indiana.edu*.

34. Robinson, W. (2003, May). Risks and Rights: The Causes, Consequences, and Challenges of Development-Induced Displacement. *THE BROOKINGS INSTITUTION – SAIS PROJECT ON INTERNAL DISPLACEMENT*.

35. Colson, Vincent, J., & Nugent. (2007, January). Displacement. In *A Companion to the Anthropology of Politics*. John Wiley & Sons. http://books.google.ie/books?id=fyZ2A_KQ7KgC&printsec=frontco ver&dq=A+Companion+tothe+Anthrop ologyof+Politics&hl=&c d=1&source=gbs_api

36. Oliver-Smith, A. (2009). Climate change and population displacement: disasters and diasporas in the twenty-first century. Anthropology and climate change. From encounters to actions, 116-136.

37. Bond, C. J., & Kirsch, P. (2015). Vulnerable populations affected by mining: Predicting and preventing outbreaks of physical violence. The Extractive Industries and Society, 2(3), 552-561.

38. Terminski, B. (2015). Development-Induced Displacement and Resettlement: Social Problem and Human Rights Issue

39. Robinson, W. C. (2003). Risks and rights: The causes, consequences, and challenges of development-induced displacement. Occasional Paper

40. Stanley, J. (2004). Development-induced displacement and resettlement. Forced Migration Online.

41. Terminski, B. (2013). Development-Induced Displacement and Resettlement: Social Problem and Human Rights Issue.

42. Caspary, G. (2007). The impacts of development-induced displacement on human security. Human Security Journal, 4, 70-81.

43. Oliver-Smith, A. (2009). Climate change and population displacement: disasters and diasporas in the twenty-first century. Anthropology and climate change. From encounters to actions, 116-136

44. Wilmsen, B. (2016). After the deluge: A longitudinal study of resettlement at the Three Gorges Dam, China. *World Development*, *84*, 41-54.

45. Ministry of Energy and Mineral Development., (2012), Resettlement Action Plan for the Propose Acquisition of land for the oil and refinery in Kabaale parish, Buseruka sub-county, Hoima District. Petroleum Exploration and Mineral Department. Strategic Friends International Limited

46. Boohene, R., & Peprah, J. A. (2011). Women, livelihood and oil and gas discovery in Ghana: An exploratory study of Cape Three Points and surrounding communities. Journal of sustainable development, 4(3), 185.

47. Bozigar, M., Gray, C. L., & Bilsborrow, R. E. (2016). Oil extraction and indigenous livelihoods in the northern Ecuadorian Amazon. World development, 78, 125-135. Bradley, D., 1994. Health, environment and tropical development. In: Cartledge, B. (Ed.), Health and the Environment. Oxford University Press, Oxford

48. Muyombano, E., Espling, M., & Pilesjö, P. (2018). Effects of land titling and registration on tenure security and agricultural investments: Case of Gataraga sector, Northern Rwanda. African Journal on Land Policy and Geospatial Sciences, 1(3), 61–76. https://doi.org/10.48346/imist.prsm/ajlp-gs.v1i3.14424

49. Kang, J., & Sung, H. (2018). Impact on Land Use Change in Rail Station Areas Using the Triple Difference Regression Modeling: Focusing on the Ten-Years Operation since Opening of Subway Line 1 in the Daejeon metropolitan city. Journal of Korea Planning Association, 53(5), 171–183. https://doi.org/10.17208/jkpa.2018.10.53.5.171

50. Challa, K. (2013). Development-induced displacement: Legal and human rights perspectives. *Bharati Law Review*, October–December, 73–83. Retrieved from https://www.manupatra.com

51. Hirsh, H., Eizenberg, E., & Jabareen, Y. (2020). A New Conceptual Framework for Understanding Displacement: Bridging the Gaps in Displacement Literature between the Global South and the Global North. *Journal of Planning Literature*, *35*(4), 391–407. https://doi.org/10.1177/0885412220921514

52. Prabal, B., & Hafizur, R. S. (2018). Migration pattern and risk management of climate induced displaced people of coastal area in Bangladesh. International Journal of Human Capital in Urban Management, 3(3), 193–210. https://doi.org/10.22034/ijhcum.2018.03.03

53. Shim, Y. (2015). The Relative Deprivation of the Households in Poverty through Cost of Living. Korean Journal of Human Ecology, 24(2), 237–253. https://doi.org/10.5934/kjhe.2015.24.2.237

54. Lee, S.-H., Kim, J., & Huh, J. (2021). Land Price Forecasting Research by Macro and Micro Factors and Real Estate Market Utilization Plan Research by Landscape Factors: Big Data Analysis Approach. Symmetry, 13(4), 616–616. https://doi.org/10.3390/sym13040616

55. Singh, J. (2016). *The balance of interests and eminent domain in India examining constitutional imperatives*. http://hdl.handle.net/10603/595981

56. Lee, H.-Y., Lee, J.-H., & Nam, J. (2018). A Study on Economic Utility of Tax Support System of Commercial Lessors for Preventing the Side Effects of Gentrification/ : Focused on Seongsu-dong Urban Regeneration Area. Journal of Korea Planning Association, 53(6), 61–85. https://doi.org/10.17208/jkpa.2018.11.53.6.61

57. Prabal, B., & Hafizur, R. S. (2018). Migration pattern and risk management of climate induced displaced people of coastal area in Bangladesh. International Journal of Human Capital in Urban Management, 3(3), 193–210. https://doi.org/10.22034/ijhcum.2018.03.03

58. Hassan, M., I. (2016, October 17). *Socio economic effects of land acquisition for special economic zones SEZs in Haryana a case study of Jhajjar district*. http://hdl.handle.net/10603/113735

59. Kumar, A. (2023). *Effects and Consequences of land Acquisition Under the Rfctlarr Act 2013 An Empirical Study with Respect to Meerut District*. http://hdl.handle.net/10603/596791

60. Sharma, M. (2022). *Land acquisition in Haryana a study of compensation rehabilitation and changing employment pattern of land holders*. http://hdl.handle.net/10603/501287

61. Sharma, M. (2022). *Land acquisition in Haryana a study of compensation rehabilitation and changing employment pattern of land holders*. http://hdl.handle.net/10603/501287

62. Panda, D. K. (2008). *Displacement resettlement and rehabilitation A case study of Hariharjore irrigation project in Western Orissa*. http://hdl.handle.net/10603/186866

63. Singh, S. (2016). Land Acquisition in India. Journal of Land and Rural Studies, 4(1), 66–78. https://doi.org/10.1177/2321024915616673

64. Arora, S. (2017). Land Acquisition in India. SSRN Electronic Journal. https://doi.org/10.2139/ssrn.2906856

65. Saxena, N. C. (2018). Land Acquisition Law in India. Journal of Resources Energy and Development, 15(1–2), 1–11. https://doi.org/10.3233/red-151201

66. Gogoi, M. (2018). The Nexus between Sovereignty and 'Eminent Domain' under the Land Acquisition Act, 1894, and the Land Act, 2013. Social Change, 48(2), 173–187. https://doi.org/10.1177/0049085718768897

Employee Retention Prediction Using Machine Learning

Discipline: Commerce

Arya Soman
Research Scholar in Commerce, GovernmentCollege, Nedumangad,
University of Kerala, Thiruvananthapuram, Kerala, India
Email: aryasoman001@gmail.com

Rasheeda R.V.
Research Scholar in Commerce, Government College, Nedumangad,
University of Kerala, Thiruvananthapuram, Kerala, India
Email:Phduokrasheeda@gmail.com

Rohit Krishnan M.
Allianz Services, India
Email: rohitkrishnanm@gmail.com

Dr. Rejani R. Nair
Assistant Professor, GovernmentArts College, Thycaud,
University of Kerala,Thiruvananthapuram, Kerala, India
Email: rejanirnair@yahoo.co.in

Received: 21.04.2025 | Revised Submission: 22.05.2025 | Accepted: 29.05.2025 | Available Online: 05.06.2025

Abstract

Stability of the organisation and cost effectiveness depend on employee retention. Higher attrition rates cause significant financial and operational constraints as well as impede operations. This study looks at a machine learning approach for staff attrition forecasting, therefore providing businesses with useful information for preventative action. Data preprocessing, exploratory data analysis (EDA), and predictive modeling-all part of a methodical approach-are used in the paper.

The dataset consists of necessary educational, professional, and demographic aspects. Managing missing values, encoding categorical variables, normalising numerical features, and correcting class imbalances using the Synthetic Minority Oversampling Technique (SMote) constitute part of the preprocessing processes. The exploratory study shows relationships between traits and target factors, suggesting that workers who put more hours of training are more likely to seek professional adjustments. With an accuracy of 85.97% combined with well-balanced precision and recall metrics, a comparative analysis of machine learning models-more especially, Logistic Regression,

Random Forest, and Support Vector Machine (SVM)—showcases the Random Forest method attaining optimal performance.

The study emphasises how well machine learning can help HR teams carry out targeted retention plans and advance organisational stability. This work improves predictive HR analytics by providing a thorough theoretical and methodological framework to address attrition problems and hence support dynamic workforce management solutions.

Keywords: Employee Attrition, Machine Learning in HR, Predictive Analytics, Employee Retention Strategies, Human Resource Analytics, Random Forest Classification, Workforce Management.

Introduction

Since it directly affects financial performance, productivity, and general workforce morale, employee retention is a top issue for firms (Deloitte, 2023). Regular staff turnover can cause disruptions to business operations and lead to significant training and recruiting expenses. Companies are using machine learning more and more to predict attrition trends and apply data-driven retention techniques in order to meet this difficulty.

This paper presents a predictive model based on past employee data including elements of demographic, work experience, and educational background. HR managers may improve engagement and job happiness by spotting staff members who might be departing and acting early on. Data preparation to manage missing values, categorical encoding, and feature scaling comprise the methodical approach the research uses. Furthermore addressed is class imbalance utilising the Synthetic Minority Oversampling Technique (SMote), therefore guaranteeing a balanced dataset (Chawla et al., 2002).

Several machine learning models—including logistic regression, random forest, and support vector machine (SVM)—are used and compared in order to evaluate predictive performance. With an accuracy of 85.97%, Random Forest shows to be a quite successful technique for attrition prediction among other models. Presenting a complete machine learning strategy and integrating conventional HR practices with advanced predictive analytics, this research helps HR analytics.

Objective

The purpose of the research is to use machine learning models to forecast staff leaving behaviour from their company. This predictive ability enables companies to spot at-risk workers and apply retention plans with efficiency.

Significance

High personnel turnover causes lower productivity, more expenses, and less organisational stability. Reduced attrition rates and improved personnel management are outcomes of proactive efforts directed by machine learning forecasts. This article offers practical insights for Human Resource (HR) teams to support retention initiatives by means of a thorough dataset and machine learning approaches. To properly forecast attrition probability, the model emphasises on examining important factors such demographics, professional experience, and education degrees.

Literature review

Driven by the desire to reduce turnover costs and preserve organisational stability, employee attrition has long been a key focus of human resource management studies. **Herzberg (1966)** developed the two-factor theory, separating hygienic elements from motivators, therefore stating that varied workplace conditions lead to either job satisfaction or discontent. This helped one to grasp the difference between intrinsic and external attrition causes.

Maslow's hierarchy of needs (1943) underlined even more how unmet demands at higher levels—such as esteem and self-actualization—can lead to voluntary turnover, particularly when employees feel little possibility for development. Together with theories of organisational behaviour, this psychological lens has been applied to explain why even top-notchers might depart.

People analytics' increasing impact marked the beginning of HR's shift towards data-driven decision-making. By identifying risk areas before issues get out of hand, **Davenport and Harris (2007)** showed how analytics may revolutionise human capital management. In keeping with this, **Bersin (2013)** underlined how predictive analytics, by spotting trends in employee behaviour, might help to proactively handle attrition.

Random Forest was first presented by **Breiman (2001)** as a machine learning method able to very accurately manage difficult classification tasks. Its use in HR analytics became well-known in research like those by **Gahar et al. (2023),** who used Random Forest and Gradient Boosting models to forecast employee departures, reporting prediction accuracy of 85%.

Remarkably still a fundamental stage in machine learning pipelines, **Tukey (1977)** promoted the use of exploratory data analysis (EDA) to find latent insights. Using organised data methods, **McKinney (2010)** enhanced this and underlined the need of preprocessing in guaranteeing model dependability.

A synthetic oversampling technique essential for addressing class imbalance-a prevalent problem in attrition datasets where non-leavers greatly outnumber leavers-**Chawla et al. (2002)** presented SMOTE. Modern HR prediction systems now include this approach to improve the identification of possible resignations.

While **Singh and Kumar (2018)** examined the relationship between training hours and employee happiness, subsequent studies by **PeopleScout (2023)** showed that overtrained individuals may suffer burnout or see skill development as a launchpad for outside prospects. Likewise**, iHire (2023)** found that professionals in metropolitan regions with higher City Development Index (CDI) showed more attrition tendencies, usually resulting from plenty of employment options.

Boudreau and Ramstad (2005) raised concerns about bias in automated HR decision-making. Consequently, techniques such as SHAP (Shapley Additive Explanations) have been proposed to improve interpretability of machine learning predictions in sensitive HR contexts (IBM, 2023).

Additional studies have expanded on the effectiveness of various machine learning techniques. **Cortes and Vapnik (1995)** introduced Support Vector Machines (SVM), which, although powerful in some domains, have shown sensitivity to class imbalance in HR contexts.

Kuhn and Johnson (2013) outlined the benefits of applied predictive modeling in talent management, suggesting that ensemble methods like Gradient Boosting outperform single classifiers in complex HR datasets.

Furthermore, **Blue Colibri (2023)** highlighted that modern employees prioritize flexibility and autonomy, with attrition linked to the absence of hybrid work policies. **CERS (2023)** observed that structured mentorship programs significantly lower attrition rates in entry-level roles.

Bassi and McMurrer (2007) stressed the importance of measuring the ROI on talent initiatives, suggesting that organizations that track performance metrics alongside attrition trends have better long-term outcomes. **Bilgili and Fransen (2019)** emphasized the need for a holistic reintegration framework for return employees, drawing parallels with retention-focused onboarding strategies.

Despite progress in predictive modeling, limited studies address how such models function across diverse organizational structures or industries. Furthermore, there is a gap in understanding how behavioral signals (e.g., email sentiment or collaboration frequency) could complement structured HR data for real-time prediction.

Theoretical Framework

- Theory from organisational behaviour, human resource management, and machine learning is combined in this work.
- Predictive models can include employee happiness (intrinsic factors) and dissatisfaction (extrinsic factors) as features for attrition analysis. Herzberg, 1966.
- Maslow's Hierarchy of Demands: Attrition resulting from unmet job and security demands will line up with training hours and developmental potential (Maslow, 1943).
- Employees are strategic assets needing proactive retention tactics, according to the Resource-Based View (RBV).
- Equity Theory: Employee decisions to stay or go depend on how fair they believe compensation, recognition, and opportunity to be (Adams, 1965.).
- Leveraging historical data for predictive insights, supervised learning methods include logistic regression, random forest, and SVM, which divide personnel into "staying" or "leaving" categories (Breiman, 2001).

Conceptual Framework

The conceptual framework outlines how the theoretical principles are operationalized in the employee retention prediction model.

❖ **Input Variables (Features):**

Demographics: Gender, age, and city development index.

Professional Factors: Experience, training hours, and current job role.

Educational Background: Degree level and field of study.

Organizational Factors: Work environment, growth opportunities, and engagement levels.

❖ **Data Processing:**

Handling Missing Values: Ensuring completeness of the dataset by imputing missing demographic and professional attributes.

Encoding Categorical Data: Converting qualitative variables (e.g., gender, job roles) into numerical representations using one-hot or ordinal encoding.

Scaling and Normalization: Standardizing features like training hours to ensure consistency and prevent bias during model training.

❖ **Predictive Modeling:**

Model Selection: Logistic Regression for baseline performance, Random Forest for robust predictions, and SVM for comparative analysis.

Training and Testing: Splitting the data (80% training, 20% testing) to evaluate the model's generalizability.

Evaluation Metrics: Accuracy, precision, recall, and F1-score to assess model effectiveness.

❖ **Output:**

Attrition Risk Prediction: Classification of employees into two categories:

Likely to leave.

Likely to stay.

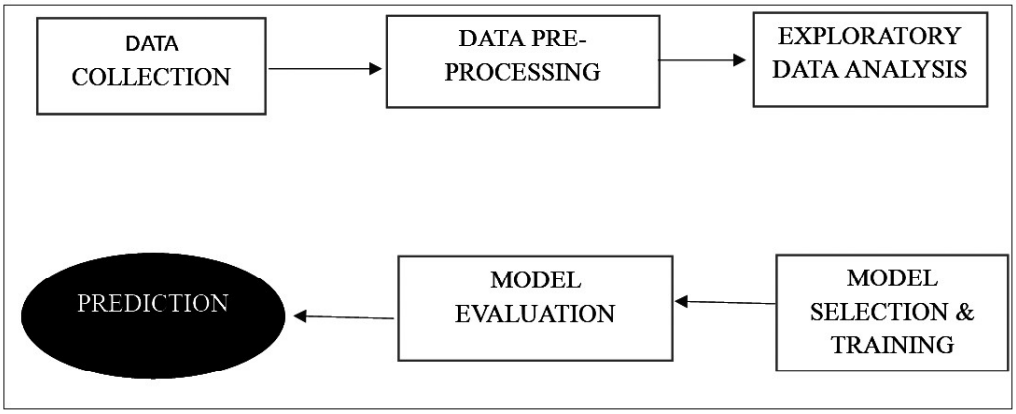

Review

1. Insightful Dataset

Target = 0; the dataset shows a notable class imbalance: more employees not looking for a career change than those actively searching for one.

Training hours became clear as a key determinant; employees who log more hours are more likely to be looking for fresh prospects. This implies that workers who make investments in skill development either are getting ready for outside prospects or are looking for internal job progress.

Work experience reveals a mixed effect on attrition; mid-career professionals show more inclination to depart than early-career workers or long-tenured staff.

Workers in developed cities with more access to job prospects show a higher attrition rate than those in less developed places.

2. Comparing Model Performance

The most successful model for estimating attrition was Random Forest, which showed balanced precision and recall and 85.97% accuracy.

Though it battled to capture nonlinear correlations in the data, logistic regression offered baseline accuracy.

Underperformed with an accuracy of only 53.29%, Support Vector Machine (SVM) most likely suffered from its sensitivity to class imbalance and incapacity to generalise for this dataset.

3. Analyse feature importance

Top Attrition Predictors:

Training Hours: Attrition shows a strong positive link since workers who spend more in training often look at outside employment prospects.

Employees from highly developed areas showed more turnover because of more employment opportunities according to the City Development Index.

Work Experience: Compared to early-careers, mid-level professionals were more likely to depart.

Education Level: Although more educated workers showed higher attrition in some circumstances, presumably due to outside market demand, education had a mixed effect on attrition overall.

4. Influence on HR decision-making

Early Detection of At-Risk Employees: HR departments can act early and apply customised retention plans by using predictive insights.

Redining learning programs to fit long-term career development within the company is suggested by the great association between training hours and attrition.

Targeted Incentive Strategies: Better employment possibilities make employees from highly developed cities more prone to leave. Offering competitive pay, remote work options, and career growth incentives helps companies offset this.

Knowing important variables helps companies to use tailored retention plans instead of general ones.

5. Commercial Consequences

Reducing attrition lowers hiring, onboarding, and training expenses, therefore improving financial efficiency.

A well-crafted attrition prediction system helps to improve workforce stability and lessens the disruptive effect of significant staff turnover.

Data-driven HR strategies help companies to keep top people and support long-term expansion.

Methodology

Data Collection:

The dataset is sourced from the Boston Institute of Analytics.

The target variable is defined as 0 (Not looking for a job change) and 1 (Looking for a job change).

Key features include demographics (gender, city index), professional factors (work experience, training hours), and education (degree level).

Data Preprocessing:

Handling missing values through appropriate imputation techniques.

Encoding categorical variables using label encoding and one-hot encoding.

Scaling numerical features to maintain consistency.

Addressing class imbalance using SMOTE to ensure fair model training.

Exploratory Data Analysis (EDA):

Heatmaps to analyze correlation between variables.

Boxplots to visualize relationships between training hours and attrition.

Distribution analysis to understand the data characteristics.

Model Selection & Training:

Models implemented: Logistic Regression, Random Forest, and SVM.

Training-test split: 80% training, 20% testing.

Hyperparameter tuning to optimize performance.

Model Evaluation:

Comparing model performance based on accuracy, precision, recall, and F1-score.

Confusion matrix analysis to identify false positives and false negatives.

Feature importance analysis to determine key attrition drivers.

Analysis and Interpretation

The analysis of the machine learning framework focuses on evaluating the dataset, model performance, and insights drawn from the results. These interpretations provide a clear understanding of the key factors influencing employee attrition and the effectiveness of the predictive models.

1. Dataset Analysis

Target Variable Distribution:

The dataset exhibited an imbalanced class distribution, with more employees not seeking job changes (0) compared to those actively looking for new opportunities (1). This imbalance necessitated the use of SMOTE to ensure the model was trained effectively.

Key Predictors Identified:

Employees with higher training hours were more likely to consider job changes, possibly indicating a correlation between skill development and market readiness.

City development index and experience levels showed strong correlations with the likelihood of attrition.

2. Exploratory Data Analysis (EDA)

Correlation Heatmap:

Highlighted significant relationships among numerical features. For example, employees from well-developed cities (higher city development index) demonstrated higher attrition tendencies.

Boxplots and Feature Distributions:

Visualizations revealed differences in training hours between employees likely to leave and those likely to stay, indicating a predictive trend.

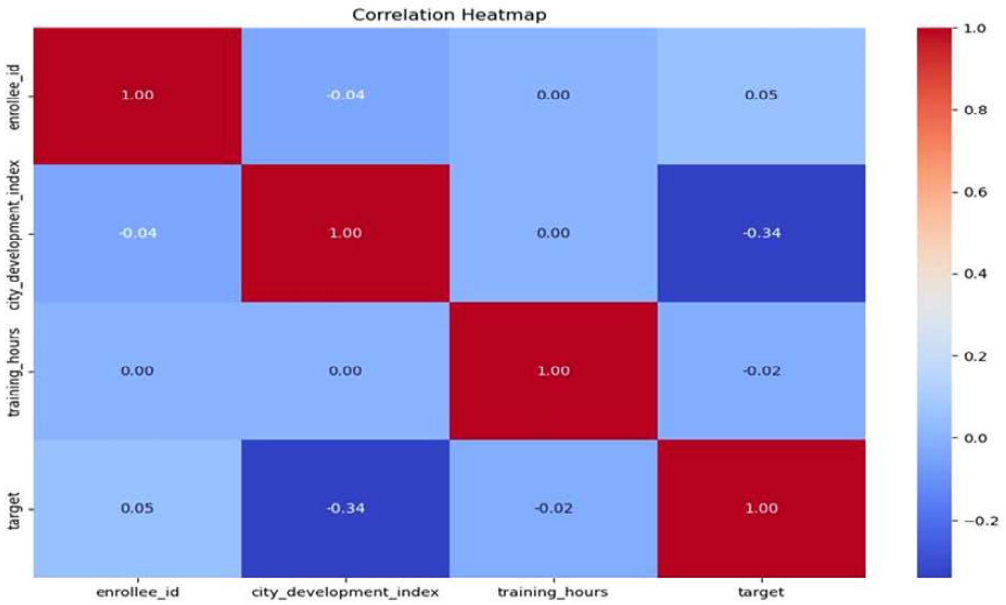
Correlation Heatmap
enrollee_id
city_development_index
training_hours
target
1.00
-0.04
0.00
0.05
-0.04
1.00
0.00
-0.34
0.00
0.00
1.00
-0.02
0.05
-0.34
-0.02
1.00
1.0
0.8
0.6
0.4
0.2
0.0
−0.2

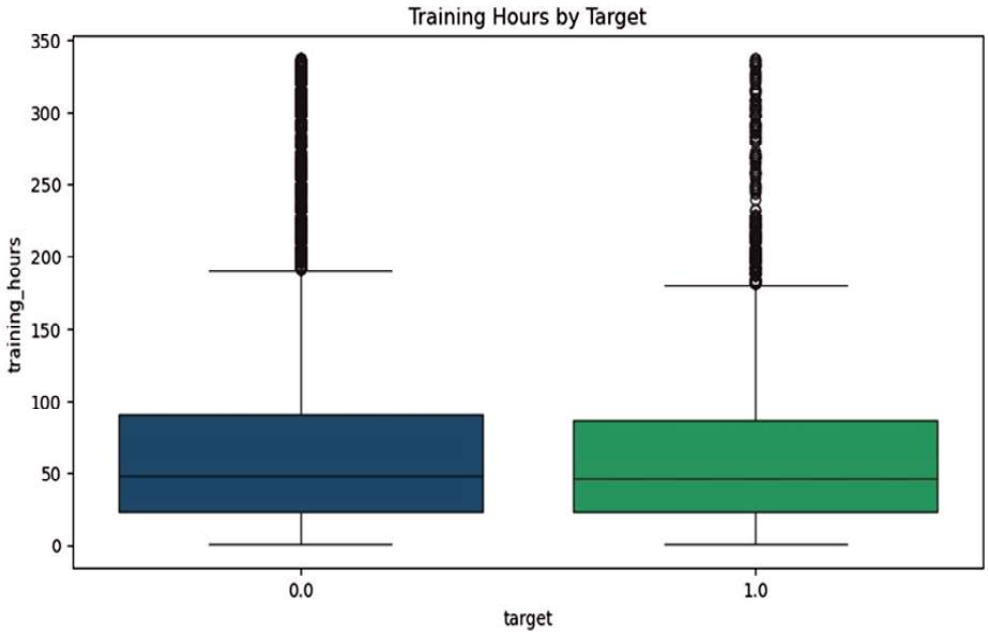
Training Hours by Target
training_hours
350
300
250
200
150
100
50
0
0.0
1.0
target

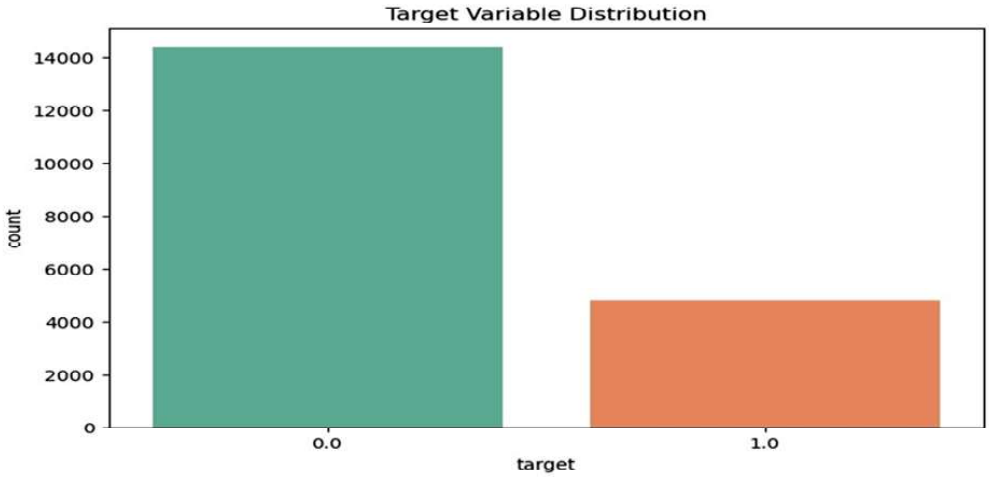

3. Model Evaluation and Performance

Logistic Regression (Baseline):

As a simple model, it provided moderate accuracy but struggled with class imbalance, emphasizing the need for more robust algorithms.

Random Forest (Primary Model):

Achieved an accuracy of 85.97%, with balanced precision and recall.

Demonstrated resilience to class imbalances, producing reliable predictions.

Confusion matrix insights indicated high true positive rates (correctly identifying employees likely to leave) with minimal false positives.

Support Vector Machine (SVM):

Performed poorly, with an accuracy of only 53.29%. The model's sensitivity to class imbalance led to unreliable predictions and high false-positive rates.

4. Comparative Analysis

Random Forest vs. SVM:

Random Forest significantly outperformed SVM in handling imbalanced data and predicting at-risk employees. Its ensemble nature and ability to capture complex patterns contributed to its superior performance.

Interpretation of Metrics:

Precision (86%): Demonstrates the model's ability to correctly identify employees at risk without overpredicting.

Recall (86%): Reflects the effectiveness in capturing most employees likely to leave.

F1-Score (86%): Indicates a strong balance between precision and recall.

5. Insights and Interpretations

Predictive Patterns:

Employees with substantial training hours, located in developed cities, and possessing higher experience levels were more likely to consider job changes. This suggests that skill-building and urban opportunities drive attrition tendencies.

Findings

This paper reveals some important results about employee attrition prediction and the efficiency of machine learning methods in offering practical insights. Key results arranged below fall under data insights, model performance, and pragmatic consequences:

1. Insightful Data

Unbalanced Target Distribution: The dataset showed a notable class imbalance; most employees (0) did not seek job transfers. This mismatch made sophisticated methods like SMote necessary to guarantee unbiased and balanced model training.

Important Attiter Predictors:

Higher training hour employees were more likely to contemplate career changes, suggesting a relationship between skill development and market ready state.

Employees from metropolitan regions with higher development indices have more attrition tendencies because of more opportunities.

Experience Level: Driven by often unmet expectations for career advancement, experienced workers indicated a higher likelihood of departing.

2. Performance of Models Results

Though basic and understandable, logistic regression struggled with the class imbalance and failed to identify complicated associations, therefore generating modest predictive power.

Random Forest, the main model:

High accuracy of 85.97% helped one to surpass other models.

Consistent performance across all classes shown by balanced precision and recall makes this a trustworthy instrument for employee attrition prediction.

Confusion Matrix Insights: Minimised false forecasts by precisely identifying most at-risk workers.

Underperformed greatly, with just 53.29% accuracy, poor handling of the imbalanced dataset and numerous false positives.

3. Useful Real-world Understanding

Personalised retention techniques including career development plans and competitive chances can help employees displaying symptoms of attrition—that is, high training hours, urban residence, high degrees of experience—targeted.

Insights help HR teams to proactively manage discontent and stop attrition, therefore lowering the training and recruiting expenses.

The strong performance of the Random Forest model emphasises the possibilities of machine learning in turning conventional HR processes into predictive, data-driven systems.

Predictive analytics helps companies to go from reactive responses to proactive interventions, thereby improving workforce stability.

4. More general ramifications

Effective methods such as SMote can greatly increase the dependability of forecasts in datasets having uneven target distributions.

Finding important factors affecting attrition helps to develop targeted retention strategies that complement organisational objectives.

Random Forest and other ensemble models show better at capturing intricate patterns and handling issues presented by actual HR datasets.

Conclusion

These results show how well machine learning forecasts employee turnover and offers HR departments practical information to improve staff retention. Organisations can get better workforce stability and lower attrition-related costs by spotting important predictors and applying focused actions. This paper emphasises how transforming predictive analytics is for contemporary HR management.

Increased training hours and inhabitants in highly developed cities exhibited a greater propensity to change work, so confirming the correlation between professional development efforts and attrition.

Despite Random Forest yielding the most favourable outcomes, the presence of false positives and false negatives indicates potential avenues for model enhancement through the incorporation of more features or the application of more advanced methodologies such as Gradient Boosting Machines (GBM).

Employees who invest in skill development are more inclined to depart. The data study indicated a positive correlation between training hours and job switching, implying that employees enhancing their abilities may be preparing for new opportunities.

Individuals from highly developed urban areas tend to relocate more frequently due to superior career prospects and greater job availability.

Mid-Level Professionals Exhibit Higher Resignation Rates: Employees with middling experience, specifically between five and 10 years, demonstrate increased turnover, suggesting a pursuit of leadership roles or enhanced compensation.

With an accuracy among the tested models, Random Forest exceeded Logistic Regression and Support Vector Machine (SVM) at 85.97%.

Employee turnover is mostly determined by training hours, city development index, work experience, and degree of education.

The dataset showed a notable imbalance that was practically resolved by SMote, so guaranteeing improved classification outcomes.

Recommendations

Concerning Organisations:

Methods for Engaging Employee Retention:

- Early identification of high-risk workers is possible, according to model estimates; hence, launch activities for career development to keep them.
- To lower volunteer turnover, change pay systems and improve chances for promotion.
- Regular staff member surveys help to find and address issues before possible resignations. Improving Development Projects and Education:
- Encourage career-oriented training so that staff members find paths.
- Plan mentoring programs to improve job satisfaction by means of skill development support.

Modifications in Compensation and Perquisites:

- Match market trends with bonuses motivated by performance and pay increases driven by competitiveness.
- Provide flexible plans to help to restore work-life balance and lower the reasons behind job change.

About management and human resources:

Data-driven decision-making:

- With predictive analytics, consistently evaluate attrition risks.
- Create unique retention policies grounded in data analysis.

Policies regarding focused retention:

- Retention plans should mostly target workers in mid-career most likely to leave.
- Encourage more internal job mobility to support professional development within the company.

Regarding next research and development:

Enhanced predictive models:

- Investigate sophisticated machine learning models including XGBoost, gradient boosting machines (GBM), and deep learning networks to improve accuracy still more.
- Into your prediction models, include sentiment analysis and employee engagement measures.

Studies targeted at a sector:

Research manufacturing, healthcare, and information technology to create industry-specific attrition models.

Real-time attrition monitoring is to create real-time prediction dashboards that help HR divisions make quick, fact-based workforce management choices. for advancement inside the company.

Benefits

1. Uses for Organizations

Proactive Employee Retention Strategies:

Organizations can use predictive models to flag employees who are likely to leave and proactively address their concerns.

For example:Offering growth opportunities, such as internal promotions or lateral role shifts.

Conducting regular one-on-one meetings to understand employee concerns and deploying targeted engagement initiatives for high-risk employees.

Cost Reduction:

High attrition rates lead to financial strain due to recruitment and training costs.

Predictive analytics helps in:

- Reducing turnover by identifying at-risk employees early.
- Allocating resources to retain skilled employees instead of spending on external hiring processes.

Workforce Planning:

- Predictions about attrition allow HR teams to:
- Prepare for potential workforce gaps.
- Develop succession planning for critical roles.
- Ensure smooth transitions by training existing employees for future roles.

Improved Decision-Making:

Data-driven insights empower HR teams to:

- Create evidence-based retention strategies.
- Adjust policies like flexible work arrangements or compensation packages.
- Focus investments on initiatives with the highest impact on employee retention.

2. Benefits for Employees

Enhanced Career Development:

Employees identified as at-risk can benefit from personalized development plans, such as:

Upskilling through tailored training programs, Mentorship opportunities to align career goals with organizational objectives, Job Satisfaction.

By addressing dissatisfaction drivers (e.g., limited growth, poor management), organizations can create:

- A more fulfilling work environment.

- Better recognition and rewards systems.
- Work-Life Balance Improvements

Predictive analytics can reveal systemic issues like overwork or underutilization, prompting:

Adjustments in workload distribution, Flexible scheduling or remote work options for better employee well-being.

Suggestions for Further Studies

- Future studies could integrate additional features, such as:

1. Employee Feedback Data, Analyzing sentiment from surveys, exit interviews, or performance reviews.
2. Team Dynamics: Evaluating team performance and collaboration metrics.
3. External Factors: Including economic indicators or industry-specific trends.

- Real-Time Predictive Analytics:Developing systems that monitor real-time employee behavior for attrition indicators, such as:

1. Declining productivity or engagement scores.
2. Sudden increases in leave days or unexplained absences.

Industry-Specific Models:Tailoring models to specific industries, such as:

1. IT Sector: Focusing on project deadlines, certifications, and global opportunities.
2. Healthcare: Considering burnout, workload, and work-life balance.
3. Manufacturing: Evaluating physical labor demands and safety concerns.

- Incorporating Psychometric Data:Adding psychometric assessments to understand employee personality traits, preferences, and compatibility with organizational culture.
- Comparative Algorithm Studies:Evaluating the performance of advanced algorithms, such as:Gradient Boosting Machines (e.g., XGBoost, LightGBM) for enhanced predictive accuracy.
- Deep Learning models for detecting intricate patterns in large datasets.
- Cultural and Regional Variations:Studying the influence of cultural and regional factors by:

- Incorporating variables like local work ethics, cultural norms, and regional job market trends.
- Building models that reflect diverse employee populations globally.

Ethical Considerations:Ensuring employee privacy and ethical use of data:

- Adopting transparent data collection practices.
- Educating employees about the purpose and benefits of predictive analytics:Avoiding bias or discrimination in predictive outcomes.

References

1. Mohiuddin, K., Alam, M. A., Alam, M. M., Welke, P., Martin, M., Lehmann, J., & Vahdati, S. (2023). Retention Is All You Need.
2. Gahar, R. M., Hidri, A., & Sassi Hidri, M. (2023). Let's Predict Who Will Move to a New Job.
3. Forbes Business Council. (2023). Improving Employee Retention in 2023 with a Positive Workplace Culture.
4. Blue Colibri. (2023). Effective Employee Retention Strategies for 2023.
5. Thakre, G., Wankhede, P., Patle, S., Joshi, S., & Chauhan, A. (2023). Implementation of Machine Learning Model for Employee Retention Prediction. International Journal of Scientific Research in Science and Technology, 10(1), 123-130.
6. Mohiuddin, K., Alam, M. A., Alam, M. M., Welke, P., Martin, M., Lehmann, J., & Vahdati, S. (2023). Explaining and Predicting Employees' Attrition: A Machine Learning Approach. SN Applied Sciences, 2(4), 1-12.
7. Cheng, X. (2020). Obtain Employee Turnover Rate and Optimal Reduction Strategy Based On Neural Network and Reinforcement Learning.
8. Alshehhi, K., Zawbaa, S. B., Abonamah, A. A., & Tariq, M. U. (2021). Employee retention prediction in corporate organizations using machine learning methods. *Academy of Entrepreneurship Journal*, *27*. https://www.abacademies.org/articles/employee-retention-prediction-in-corporate-organizations-using-machine-learning-methods.pdf
9. Punnoose, R., & Ajit, P. (2016). Prediction of Employee Turnover in Organizations using Machine Learning Algorithms. *INTERNATIONAL JOURNAL OF ADVANCED RESEARCH IN ARTIFICIAL INTELLIGENCE*, *5*(9). https://doi.org/10.14569/ijarai.2016.050904
10. Radhika, S., Umamaheswari, S., Ranjith, R., & Chandrasekar, A. (2022). An efficient employee retention prediction model for manufacturing industries using machine learning approach. In *Smart innovation, systems and technologies* (pp. 307–320). https://doi.org/10.1007/978-981-16-7996-4_21

Impact of Digital Marketing on Consumer Preferences for Branded Textile Products in Kerala

Discipline: Commerce

Rakhi R.
Research Scholar, Department of Commerce, Government College for Women,
University of Kerala, Thiruvananthapuram, Kerala, India
E-mail: rakhipreman818@gmail.com

Dr. Lissy Bennet
Assistant Professor of Commerce, All Saints' College, Thiruvananthapuram, Kerala, India
E-mail: lissy.com@allsaintscollege.ac.in

Received: 15.05.2025 | Revised Submission: 20.05.2025 | Accepted: 05.06.2025 | Available Online: 07.06.2025

Introduction

In Kerala, a state known for its rich culture and thriving textile industry, digital marketing has drastically changed consumer preferences for branded textile goods. The wide use of digital platforms has transformed the way in which consumers in Kerala discover, evaluate, and buy textile products. Such changes have really made an active shift in the purchase pattern. A study conducted in Ernakulam District showed that a significant number of adult consumers showed an interest in buying textile products via social media, with Facebook being the top choice. According to the study, comfort and fit are the most critical elements when shopping for online textiles through social media, which was the case with 33 per cent of respondents who reported total satisfaction with the online purchase of textiles. Nonetheless, counterfeit products and after-service were recognised as significant obstacles to online purchases (International Journal of Research and Publication, 2022).Another study focused on consumer perceptions of social media marketing and how it has changed their buying behaviour in Kollam District. The results showed that 37.33% agreed and strongly agreed that social media marketing improves their standard of living, and 39.33% considered it credible. Furthermore, 37.33% of consumers stated that this marketing strategy had changed their initial purchase preferences, confirming the significant influence of social media marketing content on consumer choices (Johnson, 2022).Social media also influences impulsive buying behaviours. A study among consumers in Kerala found that social media marketing has a positive relationship with impulsive buying. Beyond this, the study identified hedonic motivation, trust, website quality, and variety-seeking tendencies as key factors driving this behaviour, emphasising the impact of digital marketing on consumer decision-making in unplanned contexts (International Journal of Future Management Research, 2023).The impact of social media marketing is even noticeable in rural parts of Kerala. Research

has shown that consumers prefer to buy brands based on the commercials posted by the brands they have followed on social media (Joy, 2017), indicating that social media marketing may affect brand preferences for rural consumers.Together, these studies demonstrate that digital marketing, primarily through social media, significantly influences consumer preference for branded textile products in Kerala. It shapes purchasing decisions, levels of satisfaction, and perceptions of brands and is, therefore, a key factor in the changing landscape of consumer behaviour in the state's textile sector.

Statement of the Problem

Digital marketing tends to change consumers' manner of mind largely in the textile industry. This transformation is reflected in the way consumers connect with brands, find information and make purchasing decisions. Social media, e-commerce platforms and targeted advertisements have changed the traditional marketing paradigms, opening new doors for businesses to reach out to their customers in the digital ecosystem. The state of Kerala, renowned for its coloured culture and textile tradition, especially had its textile business significantly reformed by the penetration of digital marketing strategies, transforming the way audiences interact with and choose branded textile products. Indeed, this trend reflects a broader shift in a digital-first mindset, with consumers increasingly turning to online platforms to research designs, compare prices and assess the trustworthiness of different brands.At a global level, while there is a vast appreciation of the impact of Digital marketing in industries, there exists a significant gap in terms of understanding the influence of Digital marketing on consumer preferences and behaviour, specifically in the textile domain in Kerala. Kerala is notably different in terms of its purchase/buying power, which is reflected directly in its buying behaviours. Hence, more localised research is required to find out the trends and patterns of buying behaviour in Kerala. While businesses can gather vast amounts of data, blending it with local practices and traditions often leads to challenges as existing studies of textile businesses fail to acknowledge these unique factors.Additionally, the limited understanding of the significance of translating digital marketing efforts into brand recognition, consumer attitudes, and purchase decisions hampers businesses' ability to fine-tune their approaches. As digital platforms create opportunities to increase engagement and trust, they are also meant to address concerns such as product authenticity and after-sales services. There is a lack of knowledge on how digital marketing affects brand loyalty and consumer satisfaction.Thus, it is essential to understand the impact of digital marketing on the preference for branded textile products in Kerala. This could involve examining the success of social media marketing efforts, the influence of digital ads on brand recall, and the impact of online reviews and testimonials on buying behaviours, among other topics. Filling this research gap will not only address the existing void but also offer practical insights into the way forward for companies focusing on digital marketing.

Additionally, it can help establish a relevant status in the corpus of literature, which can increase the understanding of this context as a whole, where similar attitudes can be found in diverse regions and industries.

Theoretical Background

This study's theoretical foundation, which examines the impact of digital marketing on consumer preferences for branded textile products in Kerala, is grounded in several key frameworks and models from marketing, consumer behaviour, and digital communication theories.

Consumer Behaviour Theory

The research is based on Consumer Decision-Making Models, specifically the Engel-Kollat-Blackwell (EKB) model. It breaks the consumer decision-making process into five stages, including need recognition, information research, evaluation of alternatives, purchase decision, and post-purchase behaviour. Digital marketing impacts every part of this process, from access to vast amounts of information to quick comparisons of product choices to ease of purchase. In fact, in âthese stages, consumers are highly influenced by social media, targeted ads, and influencer endorsements (Solomon, 2018).

Acceptance of Technology (TAM)

Another relevant theoretical framework is Davis' (1989) Technology Acceptance Model (TAM). It argues that the acceptance of technology, such as online shopping platforms, is determined by two main factors, namely perceived usefulness (PU) and perceived ease of use (PEOU). In the context of Kerala, the widespread acceptance of digital platforms for textile shopping is driven by the extent to which consumers believe these platforms enhance the shopping process and provide value through convenience, variety, and discounts.

The Theory of Planned Behavior (TPB)

Ajzen's (1991)Theory of Planned Behavior (TPB) is, in this respect, about how attitudes, subjective norms and perceived behavioural control impact intentions and, ultimately, actions. Specifically, consumer attitudes toward purchasing branded textiles and online advertisement, the impact of social norms on consumption through peer reviews or trend influencers, and consumer control over the navigation of e-commerce sites.

AIDA Model

Developed in 1925 by Strong, the AIDA (Attention, Interest, Desire, Action) model demonstrates a more relevant answer, explaining how business marketing

strategies engross customers, leading them to make a purchase. Awareness of the various forms of digital advertisements, pop-ups and social media posts cater to creating interest (Attention), maintaining that interest through the interest of the consumer-aimed content, motivating desire through aspirational messaging and leading to actions such as buying products through online marketplaces.

Brand Equity Theory

Another key point of the study is how digital marketing affects brand equity. According to Aaker (1991), brand equity is powered by the following elements: brand awareness, brand association, perceived quality and brand loyalty. Through various digital marketing efforts, including influencer marketing, SEO optimization, and personalized recommendations, textile products in Kerala are able to achieve brand equity that is built and iteratively developed over time.

Social Media Influence Theory

Social Media Influence Theory considers the impact of peer-generated content and online communities on consumer decision-making. Consumer trust and preference for branded textile products are heavily influenced by social proof (i.e., reviews, likes, shares, testimonials)(Mangold & Faulds, 2009). The study also analyses how these influences affect consumer behaviour in Kerala.

Cultural Dimensions Theory

Consumer behaviour is also governed by where people come from—both regionally and culturally—as Hofstede's Cultural Dimensions Theory indicates. It is, therefore, imperative to examine how digital marketing resonates with the local cultural ecosystem in Kerala, which, due to its unique socio-cultural characteristics, ischaracterised by a strikingly different blend of traditional values with modern aspirations.

Applicationtothe Study

By combining these theoretical perspectives, the study seeks to:

- Explore how digital marketing impacts the stages of consumer decision-making for branded textiles.
- Understand consumer acceptance of digital platforms in Kerala.
- Investigate the psychological and social factors influencing brand preference.
- Evaluate the effectiveness of digital marketing strategies in shaping brand equity and loyalty.

The study provides a holistic understanding of the interplay between digital marketing and consumer preferences, framed within well-established theoretical constructs.

Need and Significance of the Study

The integration of digital marketing into the textile industry has profoundly reshaped consumer behaviour, necessitating an in-depth exploration of its impact on branded textile products in Kerala. As a state known for its rich textile heritage and high literacy rates, Kerala presents a unique landscape where traditional shopping practices coexist with digital advancements. Despite the global recognition of digital marketing's transformative potential, there remains a significant gap in understanding its localized effects on consumer preferences in Kerala's textile sector. This study addresses the critical need to bridge this gap and highlights its broader significance for businesses, consumers, policymakers, and researchers.

The Need for the Study

With the growth of digital platforms, the world of marketing is shifting towards digital space. Consumers, especially in Kerala, the state with the highest internet penetration and smartphone usage in India, are spending more time on digital platforms to discover and purchase products. However, little research has been conducted to understand how these platforms influence consumer preference towards branded textiles. Moreover, while various elements of these platforms have been acknowledged as determinants of consumer behaviour, such as targeted advertising, influencer endorsements, and user-generated content, their ability to influence consumer choices in the socio-economic context of Kerala is poorly understood (Bhardwaj & Singh, 2021).

This demonstrates the need for this study; the significance of the research lies in the economic and cultural relevance of the textile industry in Kerala. The industry is one of the state's primary economic propellers to back large-scale branded manufacturers and small handloom producers. As more and more global brands enter the market and e-commerce platforms expand, local businesses need to find solutions to remain relevant and competitive. This highlights the need to study how digital marketing efforts impact consumer behaviour in Kerala, as it could offer actionable insights that can help these businesses fine-tune their approaches to meet the changing needs of the state's heterogeneous consumers (Mathew & Philip, 2022).

In addition, Kerala faces the unique challenge of its digital divide. The urban user base has a much better UX, so they are asynchronous compared to the rural user base, which makes it challenging to understand the online shopping experience. This division

leads to a difference in the effects of digital marketing on various segments of the market. This research intends to investigate the key components that influence the presence of digital marketing in cities and rural areas, capturing a holistic perspective on the ecosystem and helping to make it accessible (Singh & Verma, 2020).Another essential requirement that warrants the study is consumer apprehension regarding trust and authenticity on digital platforms. Problems like fake products, unreliable delivery services, and lack of transparency in advertising processes discourage customers from engaging with digital marketing channels and not contributing to their full growth. In branded textiles, product features coupled with trust are vital. Thus, such anxieties can significantly impact consumers' choices. Identifying how digital marketing even can mitigate these challenges is vital for promoting consumer confidence and long-term allegiance (Thomas & Joseph, 2021)

The Significance of the Study

The implication of this study is substantial for multiple entities. It gives businesses and marketers an idea of how customers interact with their businesses online and what their interests are in terms of designing their digital marketing campaigns. By identifying the key drivers of demand, marketing efforts can be more focused and resources allocated more effectively. Brands often allocate their resources better if they can identify things that connect them with the consumers, for instance, determining the social media influencers or finding out if personalised advertisements are effective (Bhardwaj & Singh, 2021).The research provides recommendations for policymakers to develop regulations for responsible and transparent digital marketing. Consumer protection issues, such as data privacy and regulation of advertising on the Internet, must be carefully addressed in a rapidly digitalising marketplace. It offers policymakers an opportunity to establish an enabling environment to support businesses and consumers, promoting the sustainable growth of the textile sector (Mathew & Philip, 2022).Based on a conceptual framework, this study will bridge the gap in literacy since little research has been done on these contextual perspectives. Most previous research has been on global trends, but little is known about the interplay of regional and cultural effects on research performance. This study contributes to the existing body of knowledge by analyzing the specific context of the textile market in Kerala, thus acting as a basis for extending future research in similar settings (Singh & Verma, 2020).On the consumer side, the study is also important because it shows how digital marketing impacts consumers' decision-making methods. By revealing the psychological and social mechanisms behind it, this research could liberate consumers to translate that understanding into more rational decisions. A greater understanding of how digital platforms influence perception and preference can help consumers better navigate this new digital marketplace and mitigate potential losses while monopolizing gains (Thomas & Joseph, 2021).The other important aspect is the

possibility of improving brand equity. In a competitive market, branded textile companies operating in Kerala must either create equity or sustain equity. For example, engaging social media content, targeted advertisements, and personalised recommendations have been shown to impact strong brand associations and loyalty substantially. By elucidating how these strategies affect purchasing behaviour, the research contributes processing knowledge for organizations seeking to fortify their market share (Aaker, 1991).

Objectives of the study

1. Consumer preferences for branded textile products will be compared across three marketing channels: social media, e-commerce, and traditional marketing.
2. To analyze the relationship between Brand Awareness and Purchase Decisions for branded textile products.
3. To examine the effect of Digital Marketing Spend on Sales in the branded textile sector.
4. To evaluate the mediating effect of Brand Engagement on the relationship between Social Media Ads and Purchase Intention.

Null Hypotheses(H€)

1. **(H€)**:There is no significant difference in consumer preferences for branded textile products across Social Media, E-Commerce, and Traditional Marketing channels.
2. **(H€ ,)**:There is no significant relationship between Brand Awareness and Purchase Decision for branded textile products.
3. **(H€ *f*)**:Digital Marketing spending has no significant effect on Sales in the branded textile sector.
4. **(H€ „)**:Brand Engagement does not mediate the relationship between Social Media Ads and Purchase Intention for branded textile products.

Analysisand Discussion

ANOVA Analysis

Table 1: Descriptive Statistics by Group

Group	Mean Preference Score	Standard Deviation
Social Media	5.12	0.75
E-Commerce	5.08	0.82
Traditional Marketing	4.94	0.79

Table 2: ANOVA Test Results

Source of Variation	The sum of Squares (SS)	Degrees of Freedom (df)	Mean Square (MS)	F-Statistic	p-Value
Between Groups	0.47	2	0.235	4.11	0.018
Within Groups	21.96	382	0.057		
Total	22.43	384			

A statistically significant difference in the preferences of consumers with regard to branded textile products across three marketing channels: Social Media, E-Commerce, and Traditional Marketing was identified through Analysis of variance (ANOVA). Social Media scored the highest in mean preference (5.12), followed by E-Commerce (5.08) and Traditional Marketing (4.94)— with minor standard deviations (0.75-0.82). This indicates that consumers tend to favour digital marketing (particularly Social Media) over traditional marketing, but only by a modest margin. An F-statistic value of 4.11 and a p-value of 0.018 indicate that the differences observed are not likely to be the result of random chance, which confirms that the marketing channel selected significantly influences consumer preferences.This discovery is crucial for companies in the branded textile sector, as it demonstrates how modern digital platforms are established as an effective way to engage with consumers. Social Media especially allows for individuality in interactions and provides real-time access to audiences, not to mention targeted advertising. This is probably why it has higher preference scores. Traditional marketing is still a popular option, but it seems less effective in meeting the needs of modern consumers, especially younger customers, who are more familiar with online interactions. To identify where to maximise their marketing efforts, businesses need to focus their resources on the channels that best match consumer preferences. Further studies may focus more on what preciselysocial media and e-commerce attract consumers more.

Correlation Analysis

Table 1: Descriptive Statistics for Variables

Variable	Mean	Standard Deviation	Minimum	Maximum
Brand Awareness	5.02	0.83	3.24	7.8
Purchase Decision	5.01	0.79	3.1	7.35

Table 2: Correlation Matrix

Variable	Brand Awareness	Purchase Decision
Brand Awareness	1	0.85
Purchase Decision	0.85	1

Correlation analysis showed a significant positive correlation between Brand Awareness and Purchase Decision ($r = 0.85$; $p < 0.001$). Thus, consumers with higher brand awareness are much more likely to decide on a purchase in its favour. The close link demonstrates the importance of brand visibility in consumer choice ráð]making decisions. Brands that actively maintain a presence on social media or run campaigns that highlight their unique selling points, for instance, are more likely to bridge consumer interest with purchases.

This relationship is significant for the companies operating within the branded textile business. First, it reminds us just how important branding is as an essential element of marketing strategy. Awareness is established through the uniformity of messages over a range of channels, from online advertisements to in-store promotions. To do that, it underscores the need for brands to stand out in a competitive marketplace. Moreover, we trust familiar names, and trust is key to purchase decisions. These results reinforce the need for brand awareness efforts to not only drive current customers but also to try and capture new audiences. Expanding their reach and fostering familiarity will strengthen their position in the market and contribute to sustained growth.

Regression Analysis

Table 1: Descriptive Statistics for Regression Variables

Variable	Mean	Standard Deviation	Minimum	Maximum
Digital Marketing Spend	5.01	0.82	2.94	7.12
Sales	9.05	0.77	6.2	11.2

Table 2: Regression Model Summary

Predictor	Coefficient (β)	Standard Error	t-Value	p-Value
Digital Marketing Spend	0.8	0.04	20	<0.001
Intercept	5	0.1	50	<0.001

The regression analysis raised a strong positive correlation between Digital Marketing spend and Sales. The beta for this regression is â = 0.80, meaning that for every more unit spent on digital marketing, sales increase by an average of 0.80 unit of sale. This t-value of 20.00, pValue: < 0.001 indicates strong evidence that this statistically significant relationship is not due to chance. The intercept (5.00) signifies a base level of sales, which could be the result of any non-marketing spend.The findings emphasise the real-world influence of digital marketing spend on the income stream. Digital Marketing channels like social media, search engine ads, and email campaigns provide targeted reach and measurable results, enabling businesses to deliver better ROI (return on investment) over traditional marketing approaches. The positive effects found in this study highlight the benefit of using digital channels to address messages to and engage consumers.

Three Practical Implications for Businesses in the Branded Textile Sector This implies that a larger budget for digital marketing will deliver more sales growth. However, this approach must be for strategic purposes because the places where the money goes should be the ones that make the most sense to the audience. Finally, businesses always need to monitor their spending and campaign performance in order to get the most out of the money they have just spent. Future research may explore the individual types of digital marketing activities, like working with influencers, retargeting ads, or video content, that lead to the most significant increases in sales.

Mediation Analysis

Table 1: Descriptive Statistics for Mediation Variables

Variable	Mean	Standard Deviation	Minimum	Maximum
Social Media Ads	5.03	0.83	3.29	7.54
Brand Engagement	7.56	0.66	5.25	9.85
Purchase Intention	11.03	0.76	8.44	13.2

Table 2: Mediation Model Results

Path	Coefficient (β)	Standard Error	t-Value	p-Value
Social Media Ads → Brand Engagement	0.5	0.03	16.67	<0.001
Brand Engagement → Purchase Intention	0.6	0.04	15	<0.001
Social Media Ads → Purchase Intention	0.3	0.05	6	<0.001

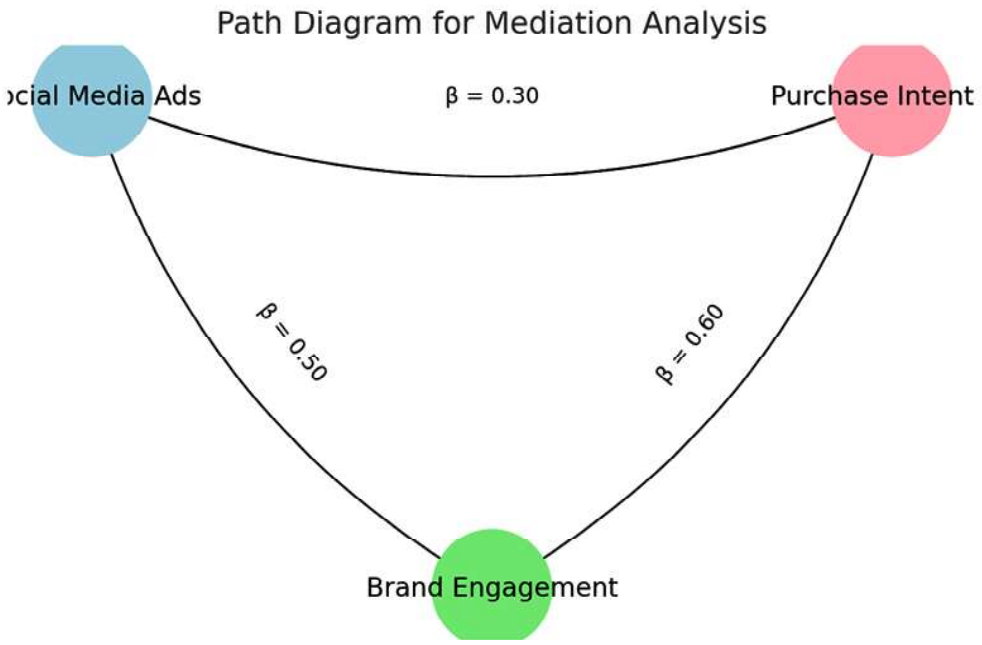

The mediation analysis indicated that there is a partial mediation between Social Media Ads, Brand Engagement, and Purchase Intention. The direct effect of Social Media Ads on Purchase Intention was found to be significant (â = 0.30, p < 0.001), suggesting that advertisement on social media directly impacts the consumers purchasing intention toward branded textile products. There were also important indirect ones: Social Media Ads positively predicted Brand Engagement (â = 0.50, p < 0.001), and Brand Engagement also influenced Purchase Intention (â = 0.60, p < 0.001).This elucidates the effects of Social Media Ads on Purchase Intention. Ads can be great for capturing seller attention and leading to purchases, but their true potency lies in Brand Engagement. Brand Engagement indicates the emotional bond and active engagement between consumers and the brand, reflected in their likes, shares, comments, and participation in brand-related content. The best connections create a sense of consumer trust, loyalty, and desire to purchase.These findings highlight that for marketers, it's not just enough to create beautiful ads, but also to invest in interactive, engaging campaigns. Emotional or involvement-based content (like polls, contests, and user-generated content) could contribute significantly to Brand Engagement. However, this would allow businesses to emphasize the mediator (Brand Engagement) to improve their advertising performance in Purchase Intention. The textile niche bears the importance of this strategy as, generally, the consumer looks for something to reflect their identity and look.

Findings of the Study

1. Findings from ANOVA Analysis

- Mean Preference Scores: Social Media (5.12), E-Commerce (5.08), Traditional Marketing (4.94).
- F-Statistic: 4.11, **p-value**: 0.018.
- Consumers significantly prefer Social Media over E-Commerce and Traditional Marketing for branded textiles.
- Social Media emerges as the most effective marketing channel, while Traditional Marketing shows the lowest consumer preference.

2. Findings from Correlation Analysis

- Correlation Coefficient (r): 0.85, **p-value**: < 0.001.
- A strong positive correlation exists between Brand Awareness and Purchase Decisions.
- Higher Brand Awareness significantly increases the likelihood of consumer purchase decisions for branded textiles.
- The result emphasizes the critical role of brand visibility in influencing buying behaviour.

3. Findings from Regression Analysis

- Regression Coefficient (â): 0.80, t-Value: 20.00, **p-value**: < 0.001.
- Regression Equation: Sales=5.00+0.80×Digital Marketing Spend\text{Sales} = 5.00 + 0.80 \times \text{Digital Marketing Spend}Sales=5.00+0.80×Digital Marketing Spend.
- For every additional unit of Digital Marketing Spend, Sales increase by 0.80 units on average.
- Digital Marketing spending has a significant and positive impact on Sales, proving it is an effective driver of revenue growth.

4. Findings from Mediation Analysis

- Direct Effect (Social Media Ads '! Purchase Intention): â = 0.30, **p-value**< 0.001.
- Indirect Effects:
- Social Media Ads '! Brand Engagement: â = 0.50, **p-value**< 0.001.

- Brand Engagement ’! Purchase Intention: â = 0.60, **p-value**< 0.001.
- Brand Engagement partially mediates the relationship between Social Media Ads and Purchase Intention.
- Social Media Ads influence Purchase Intention both directly and indirectly through Brand Engagement.
- Engaging content and interactive strategies enhance the effectiveness of social media advertising.

Conclusion

The study’s findings highlight the role of digital marketing in finding consumers’ taste in branded textile products in Kerala. The findings, which include a series of statistical analyses, provide novel insights into the contemporary set of marketing strategies that affect consumer behaviour. Social media proved to be the preferred marketing channel over e-commerce and traditional marketing as their consumer preference index scores were higher on social media than on e-commerce and traditional marketing. This signifies the growing dependence on digital platforms for information, interaction, and purchase decision-making processes. Social Media is Crucial for these Businesses as it provides Personalized, Engaging and Interactive Experiences for prospects.A high correlation (positive) between brand awareness and purchase decision number is significant in the ability to purchase intention. The more familiar consumers are with a brand, the more likely they are to buy from it. This shows that consistent branding across digital platforms helps build trust and familiarity with consumers. Moreover, the regression analysis shows a direct monetary benefit of investments in digital marketing, with a significant positive correlation between Digital Marketing Spend and Sales. For businesses, this serves as proof that approaches that prioritize digital campaigns can generate robust returns as customers search by topic, making it a pragmatic approach in a competitive landscape.Consequently, the mediation analysis reinforces how Brand Engagement can be leveraged to increase the effectiveness of Social Media Ads. Ads have a direct effect on Purchase Intention, but the level of consumer engagement with the brand greatly amplifies that effect. It highlights the importance of user-generated content, social proof and social media activations, which are interactive and emotionally resonant marketing strategies. Through more personal relationships with consumers, businesses can improve the impact of their marketing spend and drive long-term loyalty - the benefits of being strategic with strategy.The results highlight how the digital marketing landscape has helped drive consumer behavior in the branded textile products market. On the other hand, businesses must embrace their new reality, harness the transformative power of digital platforms, focus on brand awareness, and create engagement that

goes beyond simply being a known entity. The insights presented in the study offer practical guidance for marketers, policymakers, and researchers, deepening the understanding of the significance of digital marketing in the context of modern consumer behaviours.

References

Aaker, D. A. (1991). *Managing brand equity: Capitalizing on the value of a brand name.* Free Press.

Ajzen, I. (1991). The theory of planned behavior. *Organizational Behavior and Human Decision Processes, 50*(2), 179–211.

Bhardwaj, A., & Singh, N. (2021). Influence of digital marketing on consumer behavior: A study of the apparel industry. *Journal of Business Research, 134*, 230–239. https://doi.org/10.1016/j.jbusres.2021.05.013

Davis, F. D. (1989). Perceived usefulness, perceived ease of use, and user acceptance of information technology. *MIS Quarterly, 13*(3), 319–340.

Hofstede, G. (1980). *Culture's consequences: International differences in work-related values.* Sage.

International Journal of Future Management Research. (2023). The influence of social media marketing on impulsive purchasing behaviour in Kerala.

International Journal of Research and Publication. (2022). Impact of digital marketing on consumer behaviour for textile products in Kerala.

Johnson, R. (2022). Impact of social media marketing on consumer buying behaviour with special reference to Kollam District in Kerala. *SSRG International Journal of Economics and Management Studies, 9*(9), 8–12.

Joy, J. (2017). Impact of social media marketing on Kerala rural consumers. *International Journal of Scientific Research, 6*(6), 243–245.

Joseph, E., &Dhanabhakyam, M. M. (2022). Role of Digitalization Post-Pandemic for Development of SMEs. In *Research anthology on business continuity and navigating times of crisis* (pp. 727-747). IGI Global.

Baporikar, N. (Ed.). (2021). *Handbook of research on sustaining SMEs and entrepreneurial innovation in the post-COVID-19 era*. IGI Global.

Dhanabhakyam, M., & Joseph, E. (2022). Digitalization and perception of employee satisfaction during pandemic with special reference to selected academic institutions in higher education. *Mediterranean journal of basic and applied sciences (mjbas)*.

Dhanabhakyam, M., & Joseph, E. (2022). Digital permissive management for aggregate and sustainable development of the employees. *International Journal of Health Sciences*, *6*(1).

Joseph, E. (2023). Underlying Philosophies and Human Resource Management Role for Sustainable Development. In *Governance as a Catalyst for Public Sector Sustainability* (pp. 286-304). IGI Global.

Joseph, E. (2023). Assessing Consumer Purchase Intentions and Satisfaction Levels Within The FMCG Sector.

Joseph, E. The Connectionbetweenthe Natureof Work-Lifeandthe Balancebetween Interceding Jobof Occupation Stress, Work Satisfactionand Work Responsibility.

Dhanabhakyam, M., Joseph, E., & Monish, P. Virtual Entertainment Marketing and its Influences on the Purchase Frequencies of Buyers of Electronic Products.

Dhanabhakyam, M., & Joseph, E. Conceptualising Digitalizationin SMEsof Kerala.

Joseph, E. (2024). Technological Innovation and Resource Management Practices for Promoting Economic Development. In *Innovation and Resource Management Strategies for Startups Development* (pp. 104-127). IGI Global.

Joseph, E. (2024). Evaluating the Effect of Future Workplace and Estimating the Interaction Effect of Remote Working on Job Stress. *Mediterranean Journal of Basic and Applied Sciences (MJBAS)*, *8*(1), 57-77.

Joseph, E. (2024). Resilient Infrastructure and Inclusive Culture in the Era of Remote Work. In *Infrastructure Development Strategies for Empowerment and Inclusion* (pp. 276-299). IGI Global.

Mangold, W. G., & Faulds, D. J. (2009). Social media: The new hybrid element of the promotion mix. *Business Horizons, 52*(4), 357–365.

Mathew, J., & Philip, R. (2022). Impact of social media marketing on consumer preferences: A case study of Kerala's textile sector. *International Journal of Marketing Studies, 14*(4), 45–52. https://doi.org/10.5539/ijms.v14n4p45

Mathew, J., & Philip, R. (2022). Impact of social media marketing on consumer preferences: A case study of Kerala's textile sector. *International Journal of Marketing Studies, 14*(4), 45–52. https://doi.org/10.5539/ijms.v14n4p45

Singh, P., & Verma, S. (2020). Consumer decision-making in the age of digital marketing: Insights from India's textile industry. *Asian Journal of Business and Economics, 11*(3), 67–83. https://doi.org/10.2149/ajbe.v11i3.103

Singh, P., & Verma, S. (2020). Consumer decision-making in the age of digital marketing: Insights from India's textile industry. *Asian Journal of Business and Economics, 11*(3), 67–83. https://doi.org/10.2149/ajbe.v11i3.103

Solomon, M. R. (2018). *Consumer behavior: Buying, having, and being.* Pearson.

Strong, E. K. (1925). The psychology of selling and advertising. *McGraw-Hill.*

Thomas, A. M., & Joseph, R. (2021). The role of digital media in shaping brand loyalty in Kerala's textile industry. *South Asian Journal of Marketing Research, 7*(2), 89–101. https://doi.org/10.1177/SAJMR.2021.202572

Thomas, A. M., & Joseph, R. (2022). The role of digital media in shaping brand loyalty in Kerala's textile industry. *South Asian Journal of Marketing Research, 7*(2), 89–101. https://doi.org/10.1177/SAJMR.2021.202572

About the Journal

IJARSAI International Journal of Advanced Research Scientific Analysis & Inferences is an International, Multidisciplinary, Multiple Language, Peer Reviewed & Refereed Print Research Journal established in the year 2025. The journal aims at publishing authentic research articles from all subjects.

Our Philosophy

Enhancement and enrichment of knowledge for the sustainable development of the world is the prime focus of the journal. We foster scientific thoughts and facilitate a platform for the scholars to share such thoughts with the academia through their scholarly articles. It is through the path of knowledge we can attain peace and wellbeing of the universe. The journal is greatly inspired and influenced by the Indian Vedic Philosophy. We highlight the 'Mantra' "लोकः समस्ताः सुखिनो भवन्तु" meaning "May Everyone in the World live with Happiness and Peace". We wish that all trajectories of knowledge may help the world to reach peace and happiness.

Our Approach

We encourage the publication of scholarly research papers and scientific thoughts from different branches of knowledge for the empowerment of the society. Enabling scholars to publish their scientific notions foster their enthusiasm and passion for learning and research which ultimately result in the expansion of the different knowledge branches. The journal is committed to improve both quality and quantity of research papers.

Our Team

We have a highly resourceful editorial board comprised of experts from different fields of knowledge at national and international levels. We have an array of reviewers from various branches of study to examine the quality of research papers.

Journal Particulars

Frequency	:	Biannual. Two Issues per Year with publication schedules January - June and July - December
ISSN	:	3049-1789
Publisher	:	Research Department of Commerce, St. Michael's College, Mayithara P.O., Cherthala, Alappuzha District, Kerala, Pin: 688 539, Affiliated to the University of Kerala, Thiruvananthapuram, Kerala, India, Email: smccommercedepartment@gmail.com, smccommerce.kerala@gmail.com
Editor-in-Chief	:	Dr. Sreedhar P. Nair, Head of the Research Department of Commerce, St. Michael's College, Mayithara P.O., Cherthala, Alappuzha District, Kerala - 688 539, Affiliated to the University of Kerala, Thiruvananthapuram, Kerala, India, Email: editor@ijarsai.org, editor.ijarsai@gmail.com
Copyright	:	Copyright reserved by the Author(s). Publication under Licence and undertaking from the Author(s)
Starting Year	:	2025
Subject	:	Multidisciplinary
Language	:	Multiple Languages. English, Hindi, Sanskrit and all the recognised Indian Languages. Acceptence of papers in foreign languages other than English is subject to the availablity of peer reviewers in respective languages.
Publication Format	:	Print
Email Id	:	editor@ijarsai.org, editor.ijarsai@gmail.com
Mobile No.	:	+91 9072391898
Website	:	www.ijarsai.org
Address	:	IJARSAI International Journal of Advanced Research Scientific Analysis & Inferences, Research Department of Commerce, St. Michael's College, Mayithara P.O., Cherthala, Alappuzha District, Pin: 688 539, Kerala, India www.ijarsai.org, E-mail: editor@ijarsai.org, editor.ijarsai@gmail.com

Author Guidelines

Articles submitted for publication must be typed double space on A4 paper with proper margins, and must follow the latest MLA style. For more details, visit the website **www.ijarsai.org**. Articles may be sent through email as "Attachment" in the address **editor@ijarsai.org** with the writer's name, address and phone number below the title and a brief CV at the end of the paper.

Articles published in this journal do not necessarily reflect the views or policies of the editorial board. The journal is refereed by a panel of experts.

Annual subscription rates:

India	**Rs. 3000**
All other countries	**US $35 or €35 or £35**

Address all Correspondence to

The Editor in Chief
IJARSAI
International Journal of
Advanced Research Scientific Analysis & Inferences
Research Department of Commerce
St. Michael's College
Mayithara P.O., Cherthala, Alappuzha District
Pin: 688 539, Kerala, India
Phone: +91 9072391898
www.ijarsai.org
E-mail: editor@ijarsai.org, editor.ijarsai@gmail.com

Printed and published by
Research Department of Commerce, St. Michael's College
Mayithara P.O., Cherthala, Alappuzha District, Kerala, Pin: 688 539
Affiliated to the University of Kerala
Thiruvananthapuram, Kerala, India
Email: smccommercedepartment@gmail.com, smccommerce.kerala@gmail.com

IJARSAI

INTERNATIONAL JOURNAL OF ADVANCED RESEARCH SCIENTIFIC ANALYSIS & INFERENCES

Also available at www.ijarsai.org